Excellent Integrated System Limited

Stocking Distributor

Click to view price, real time Inventory, Delivery & Lifecycle Information:

Amphenol RF
172103RP

For any questions, you can email us directly:
sales@integrated-circuit.com

REV.	DATE	DESCRIPTION
NC	06/08/98	INITIAL RELEASE
A	06/25/06	UPDATE DRAWING FORMAT, REVISE PLATING TO NEXCOTE
B	12/19/06	REVISE NOTE 2.

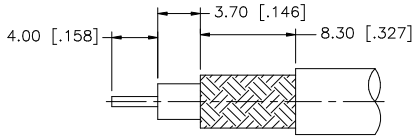

RECOMMENDED
CABLE STRIPPING DIM'S

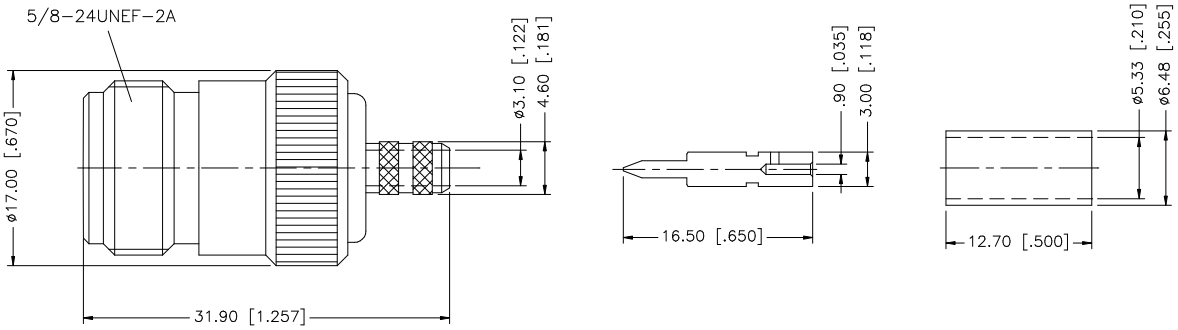

NOTE:

1. CRIMPED FERRULE HEX. CRIMP SIZE .213"
2. CRIMPED CONTACT PIN HEX. CRIMP SIZE .100"

	DESCRIPTION	MATERIAL	FINISH	QTY
8				
7				
6				
5				
4	FERRULE	COPPER	NEXCOTE	1
3	CONTACT PIN	BRASS	GOLD	1
2	INSULATOR	TEFLON	NATURAL	1
1	BODY	BRASS	NEXCOTE	1

UNLESS OTHERWISE SPECIFIED DIMENSIONS ARE IN MILLIMETERS, DIMENSIONS IN [ ] ARE IN INCHES AND FOR CUSTOMER REFERANCE ONLY.

UNLESS OTHERWISE SPECIFIED TOLERANCES FOR MILLIMETERS ARE:
0.5 – 8mm ± 0.20mm
8 – 30mm ± 0.40mm
30 – 120mm ± 0.50mm

UNLESS OTHERWISE SPECIFIED TOLERANCES FOR INCHES ARE:
.020 – .315 = ± 0.007"
.315 – 1.180 = ± 0.015"
1.180 – 4.724 = ± 0.020"

DO NOT SCALE DRAWING

APPROVALS		DATE
DRAWN	G.R.S.	12/19/06
CHECKED		
ISSUED		
SHEET	1 OF 1	
CAD FILE	C:/172/172103RP.DWG	

Amphenol Connex

PART DESCRIPTION: N REVERSE POLARITY CRIMP JACK (FOR RG-58/U CABLE)

PART NO. 172103RP

DWG. NO. 172103RP.DWG | REV. B | SIZE A | SCALE NA