Excellent Integrated System Limited

Stocking Distributor

Click to view price, real time Inventory, Delivery & Lifecycle Information:

Fairchild Semiconductor
MM74HC589MX

For any questions, you can email us directly:
sales@integrated-circuit.com

Distributor of Fairchild Semiconductor: Excellent Integrated System Limited
Datasheet of MM74HC589MX - IC SHIFT REGISTER 8-BIT 16-SOIC
Contact us: sales@integrated-circuit.com Website: www.integrated-circuit.com

FAIRCHILD SEMICONDUCTOR™

September 1983
Revised September 2001

MM74HC589
8-Bit Shift Registers with Input Latches and 3-STATE Serial Output

General Description

The MM74HC589 high speed shift register utilizes advanced silicon-gate CMOS technology to achieve the high noise immunity and low power consumption of standard CMOS integrated circuits, as well as the ability to drive 15 LS-TTL loads.

The MM74HC589 comes in a 16-pin package and consists of an 8-bit storage latch feeding a parallel-in, serial-out 8-bit shift register. Data can also be entered serially the shift register through the SER pin. Both the storage register and shift register have positive-edge triggered clocks, RCK and SCK, respectively. $\overline{\text{SLOAD}}$ pin controls parallel LOAD or serial shift operations for the shift register. The shift register has a 3-STATE output to enable the wire-ORing of multiple devices on a serial bus.

The 74HC logic family is speed, function, and pin-out compatible with the standard 74LS logic family. All inputs are protected from damage due to static discharge by internal diode clamps to V_{CC} and ground.

Features

- 8-bit parallel storage register inputs
- Wide operating voltage range: 2V–6V
- Shift register has direct overriding load
- Guaranteed shift frequency. . . DC to 30 MHz
- Low quiescent current: 80 µA maximum (74HC Series)
- 3-STATE output for 'Wire-OR'

Ordering Code:

Order Number	Package Number	Package Description
MM74HC589M	M16A	16-Lead Small Outline Integrated Circuit (SOIC), JEDEC MS-012, 0.150" Narrow
MM74HC589SJ	M16D	16-Lead Small Outline Package (SOP), EIAJ TYPE II, 5.3mm Wide
MM74HC589N	N16E	16-Lead Plastic Dual-In-Line Package (PDIP), JEDEC MS-001, 0.300" Wide

Devices also available in Tape and Reel. Specify by appending the suffix letter "X" to the ordering code.

Connection Diagram

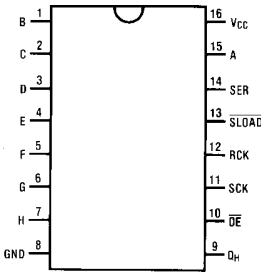

Top View

Truth Table

RCK	SCK	$\overline{\text{SLOAD}}$	$\overline{\text{OE}}$	Function
X	X	X	H	Q_H in Hi-Z State
X	X	X	L	Q_H is enabled
↑	X	X	X	Data loaded into input latches
↑	X	L	X	Data loaded into shift register from pins
H or L	X	L	X	Data loaded from latches to shift register
X	↑	H	X	Shift register is shifted. Data on SER pin is shifted in.
↑	↑	H	X	Data is shifted in shift register, and data is loaded into latches

© 2001 Fairchild Semiconductor Corporation

Block Diagram (positive logic)

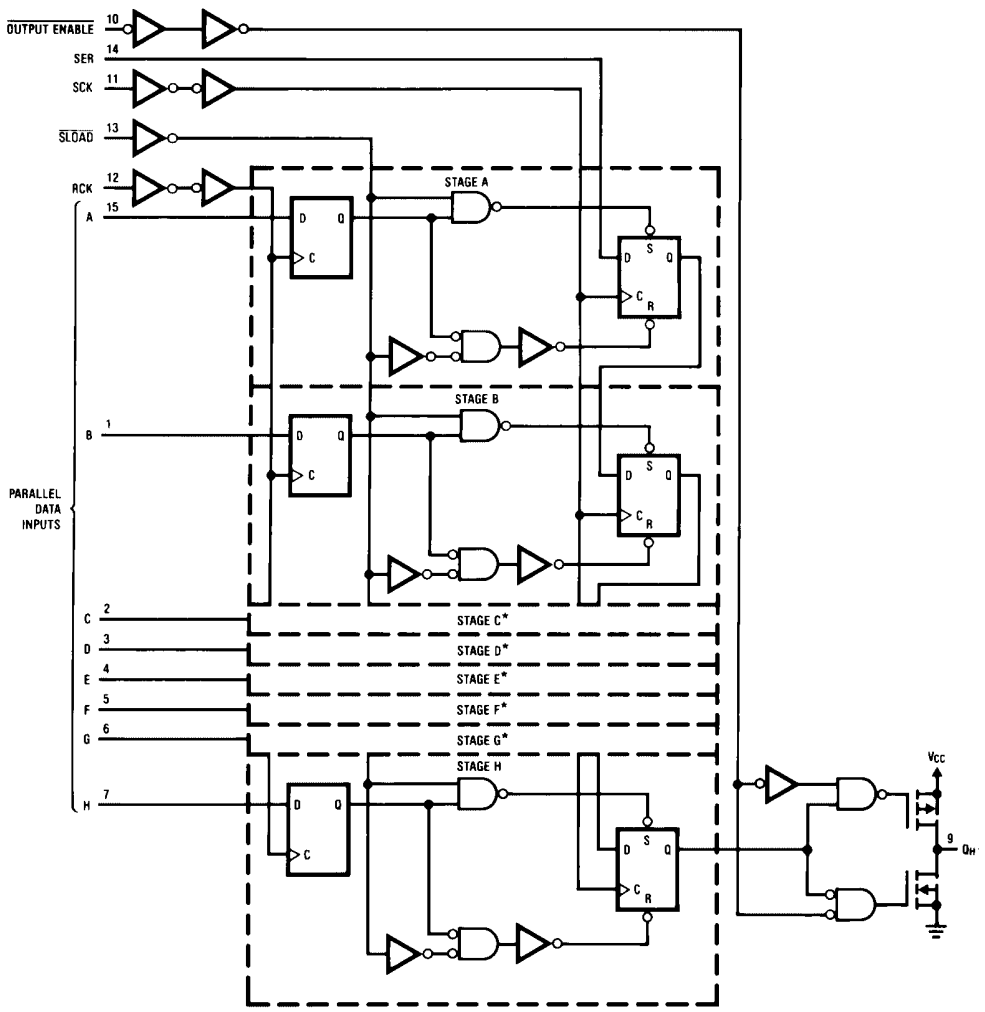

Absolute Maximum Ratings (Note 1)

(Note 2)

Supply Voltage (V_{CC})	−0.5 to +7.0V
DC Input Voltage (V_{IN})	−1.5 to V_{CC} +1.5V
DC Output Voltage (V_{OUT})	−0.5 to V_{CC} +0.5V
Clamp Diode Current (I_{IK}, I_{OK})	±20 mA
DC Output Current, per pin (I_{OUT})	±25 mA
DC V_{CC} or GND Current, per pin (I_{CC})	±50 mA
Storage Temperature Range (T_{STG})	−65°C to +150°C
Power Dissipation (P_D)	
(Note 3)	600 mW
S.O. Package only	500 mW
Lead Temperature (T_L)	
(Soldering 10 seconds)	260°C

Recommended Operating Conditions

	Min	Max	Units
Supply Voltage (V_{CC})	2	6	V
DC Input or Output Voltage			
(V_{IN}, V_{OUT})	0	V_{CC}	V
Operating Temperature Range (T_A)	−40	+85	°C
Input Rise or Fall Times			
(t_r, t_f) V_{CC} = 2.0V		1000	ns
V_{CC} = 4.5V		500	ns
V_{CC} = 6.0V		400	ns

Note 1: Absolute Maximum Ratings are those values beyond which damage to the device may occur.

Note 2: Unless otherwise specified all voltages are referenced to ground.

Note 3: Power Dissipation temperature derating — plastic "N" package: −12 mW/°C from 65°C to 85°C.

DC Electrical Characteristics (Note 4)

Symbol	Parameter	Conditions	V_{CC}	T_A = 25°C		T_A = −40 to 85°C	T_A = −55 to 125°C	Units
				Typ	Guaranteed Limits			
V_{IH}	Minimum HIGH Level Input Voltage		2.0V		1.5	1.5	1.5	V
			4.5V		3.15	3.15	3.15	V
			6.0V		4.2	4.2	4.2	V
V_{IL}	Maximum LOW Level Input Voltage		2.0V		0.5	0.5	0.5	V
			4.5V		1.35	1.35	1.35	V
			6.0V		1.8	1.8	1.8	V
V_{OH}	Minimum HIGH Level Output Voltage	$V_{IN} = V_{IH}$ or V_{IL} $\lvert I_{OUT}\rvert \le 20\ \mu A$	2.0V	2.0	1.9	1.9	1.9	V
			4.5V	4.5	4.4	4.4	4.4	V
			6.0V	6.0	5.9	5.9	5.9	V
		$V_{IN} = V_{IH}$ or V_{IL} $\lvert I_{OUT}\rvert \le 6.0$ mA	4.5V		3.98	3.84	3.7	V
		$\lvert I_{OUT}\rvert \le 7.8$ mA	6.0V		5.48	5.34	5.2	V
V_{OL}	Maximum LOW Level Output Voltage	$V_{IN} = V_{IH}$ or V_{IL} $\lvert I_{OUT}\rvert \le 20\ \mu A$	2.0V	0	0.1	0.1	0.1	V
			4.5V	0	0.1	0.1	0.1	V
			6.0V	0	0.1	0.1	0.1	V
		$V_{IN} = V_{IH}$ or V_{IL} $\lvert I_{OUT}\rvert \le 6.0$ mA	4.5V		0.26	0.33	0.4	V
		$\lvert I_{OUT}\rvert \le 7.8$ mA	6.0V		0.26	0.33	0.4	V
I_{IN}	Maximum Input Current	$V_{IN} = V_{CC}$ or GND	6.0V		±0.1	±1.0	±1.0	µA
I_{CC}	Maximum Quiescent Supply Current	$V_{IN} = V_{CC}$ or GND $I_{OUT} = 0\ \mu A$	6.0V		8.0	80	160	µA
I_{OZ}	Maximum 3-STATE Leakage Current	Output in High Impedance State $V_{IN} = V_{IL}$ or V_{IH} $V_{OUT} = V_{CC}$ or GND $\overline{OE} = V_{IH}$	6.0V		±0.5	±5.0	±10.0	µA

Note 4: For a power supply of 5V ±10% the worst case output voltages (V_{OH}, and V_{OL}) occur for HC at 4.5V. Thus the 4.5V values should be used when designing with this supply. Worst case V_{IH} and V_{IL} occur at V_{CC}=5.5V and 4.5V respectively. (The V_{IH} value at 5.5V is 3.85V.) The worst case leakage current (I_{IN}, I_{CC}, and I_{OZ}) occur for CMOS at the higher voltage and so the 6.0V values should be used.

AC Electrical Characteristics

V_{CC} = 5V, T_A = 25°C, C_L = 15 pF, t_r = t_f = 6 ns

Symbol	Parameter	Conditions	Typ	Guaranteed Limit	Units
f_{MAX}	Maximum Operating Frequency for SCK		50	30	MHz
t_{PHL}, t_{PLH}	Maximum Propagation Delay from SCK to $Q_{H'}$			30	ns
t_{PHL}, t_{PLH}	Maximum Propagation Delay from $\overline{SLOAD}$ to $Q_{H'}$			30	ns
t_{PHL}, t_{PLH}	Maximum Propagation Delay from LCK to $Q_{H'}$	$\overline{SLOAD}$ = logic "0"	25	45	ns
t_{PZH}, t_{PZL}	Output Enable Time	R_L = 1 kΩ	18	28	ns
t_{PHZ}, t_{PLZ}	Output Disable Time	R_L = 1 kΩ, C_L = 5 pF	19	25	ns
t_S	Minimum Setup Time from RCK to SCK		10	20	ns
t_S	Minimum Setup Time from SER to SCK		10	20	ns
t_S	Minimum Setup Time from Inputs A thru H to RCK		10	20	ns
t_H	Minimum Hold Time		0	5	ns
t_W	Minimum Pulse Width SCK, RCK, $\overline{SLOAD}$		8	16	ns

AC Electrical Characteristics

V_{CC} = 2.0–6V, C_L = 50 pF, t_r = t_f = 6 ns (unless otherwise specified)

Symbol	Parameter	Conditions	V_{CC}	T_A = 25°C		T_A = −40 to 85°C	T_A = −55 to 125°C	Units
				Typ	Guaranteed Limits			
f_{MAX}	Maximum Operating		2.0V		6	4.8	4	MHz
	Frequency for SCK		4.5V		30	24	20	MHz
			6.0V		35	28	24	MHz
t_{PHL}, t_{PLH}	Maximum Propagation		2.0V	62	175	220	265	ns
	Delay from SCK or		4.5V	20	35	44	53	ns
	$\overline{SLOAD}$ to Q_H		6.0V	18	30	37	45	ns
t_{PHL}, t_{PLH}	Maximum Propagation		2.0V	120	225	280	340	ns
	Delay from SCK or	C_L = 150 pF	4.5V	31	45	56	68	ns
	$\overline{SLOAD}$ to Q_H		6.0V	28	38	48	58	ns
t_{PHL}, t_{PLH}	Maximum Propagation		2.0V	80	210	265	315	ns
	Delay from RCK to Q_H		4.5V	25	42	53	63	ns
			6.0V	21	36	45	54	ns
t_{PHL}, t_{PLH}	Maximum Propagation		2.0V	80	210	265	313	ns
	Delay RCK to Q_H	C_L = 150 pF	4.5V	25	52	66	77	ns
			6.0V	21	44	56	66	ns
t_{PZH}, t_{PZL}	Output Enable Time	R_L = 1 kΩ	2.0V	70	150	189	224	ns
			4.5V	22	30	38	45	ns
			6.0V	20	26	32	38	ns
t_{PHZ}, t_{PLZ}	Output Disable Time	R_L = 1 kΩ	2.0V	70	150	189	224	ns
			4.5V	22	30	38	45	ns
			6.0V	20	26	32	38	ns
t_S	Minimum Setup Time		2.0V		100	125	150	ns
	from RCK to SCK		4.5V		20	25	30	ns
			6.0V		17	22	25	ns
t_S	Minimum Setup Time		2.0V		100	125	150	ns
	from SER to SCK		4.5V		20	25	30	ns
			6.0V		17	22	25	ns
t_S	Minimum Setup Time		2.0V		100	125	150	ns
	from Inputs A thru H		4.5V		20	25	30	ns
	to RCK		6.0V		17	22	25	ns
t_H	Minimum Hold Time		2.0V	−5	5	5	5	ns
			4.5V	0	5	5	5	ns
			6.0V	1	5	5	5	ns
t_W	Minimum Pulse Width		2.0V	30	80	100	120	ns
	SCK, RCK, $\overline{SLOAD}$,		4.5V	9	16	20	24	ns
	$\overline{SLOAD}$		6.0V	8	14	17	20	ns

AC Electrical Characteristics (Continued)

Symbol	Parameter	Conditions	V_{CC}	$T_A = 25°C$		$T_A = -40$ to $85°C$	$T_A = -55$ to $125°C$	Units
				Typ	Guaranteed Limits			
t_r, t_f	Maximum Input Rise and Fall Time, Clock		2.0V		1500	1500	1500	ns
			4.5V		500	500	500	ns
			6.0V		400	400	400	ns
t_{THL}, t_{TLH}	Maximum Output Rise and Fall Time		2.0V	25	60	75	90	ns
			4.5V	6	12	15	18	ns
			6.0V	5	10	12	15	ns
C_{PD}	Power Dissipation Capacitance (Note 5)			87				pF
C_{IN}	Maximum Input Capacitance			5	10	10	10	pF
C_{OUT}	Maximum Output Capacitance			15	20	20	20	pF

Note 5: C_{PD} determines the no load dynamic power consumption, $P_D = C_{PD} V_{CC}^2 f + I_{CC} V_{CC}$, and the no load dynamic current consumption, $I_S = C_{PD} V_{CC} sf + I_{CC}$.

Timing Diagram

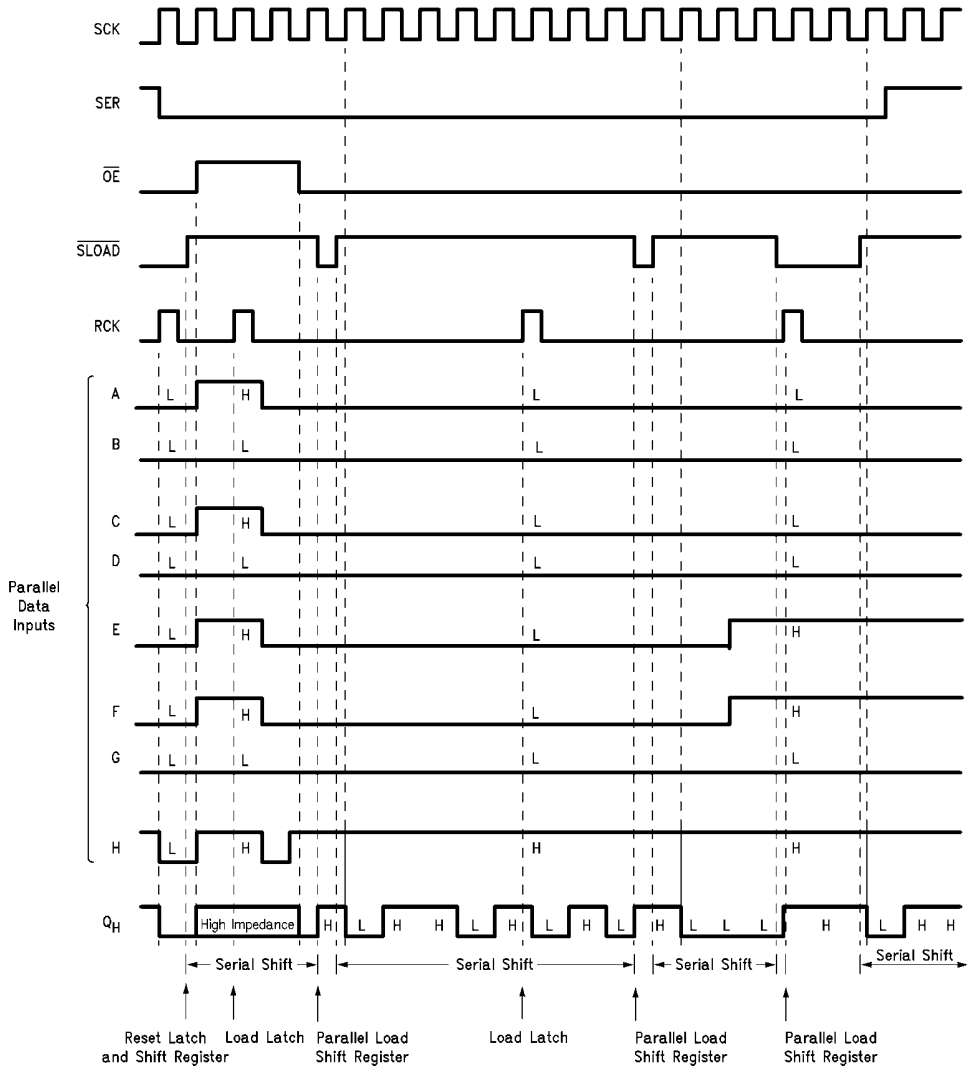

Physical Dimensions inches (millimeters) unless otherwise noted

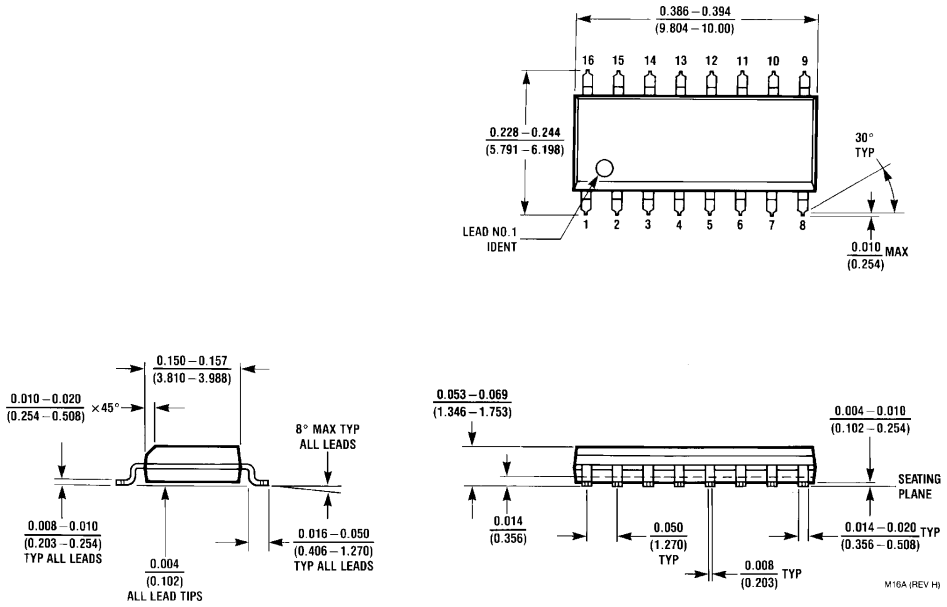

16-Lead Small Outline Integrated Circuit (SOIC), JEDEC MS-012, 0.150" Narrow
Package Number M16A

Physical Dimensions inches (millimeters) unless otherwise noted (Continued)

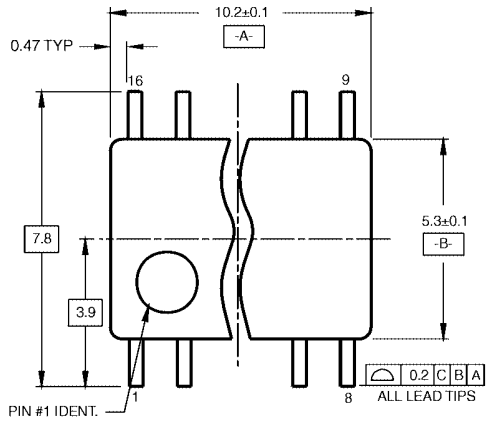

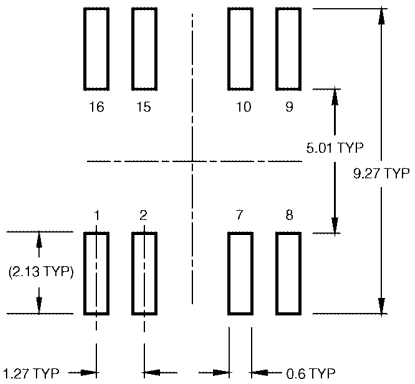

LAND PATTERN RECOMMENDATION

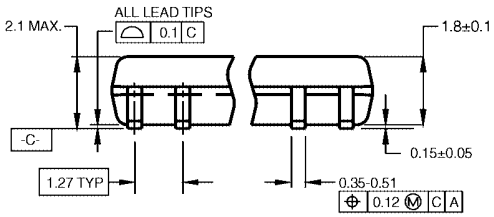

DIMENSIONS ARE IN MILLIMETERS

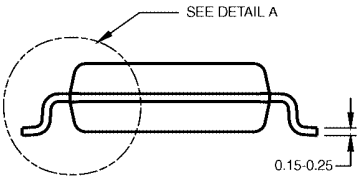

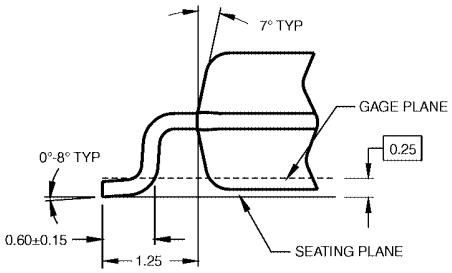

DETAIL A

NOTES:

A. CONFORMS TO EIAJ EDR-7320 REGISTRATION, ESTABLISHED IN DECEMBER, 1998.

B. DIMENSIONS ARE IN MILLIMETERS.

C. DIMENSIONS ARE EXCLUSIVE OF BURRS, MOLD FLASH, AND TIE BAR EXTRUSIONS.

M16DRevB1

16-Lead Small Outline Package (SOP), EIAJ TYPE II, 5.3mm Wide
Package Number M16D

Physical Dimensions inches (millimeters) unless otherwise noted (Continued)

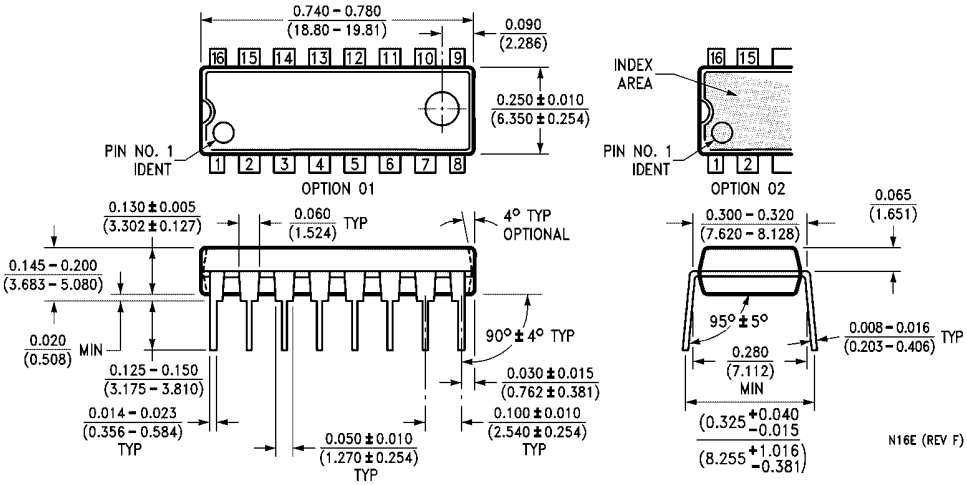

16-Lead Plastic Dual-In-Line Package (PDIP), JEDEC MS-001, 0.300" Wide
Package Number N16E

Fairchild does not assume any responsibility for use of any circuitry described, no circuit patent licenses are implied and Fairchild reserves the right at any time without notice to change said circuitry and specifications.

LIFE SUPPORT POLICY

FAIRCHILD'S PRODUCTS ARE NOT AUTHORIZED FOR USE AS CRITICAL COMPONENTS IN LIFE SUPPORT DEVICES OR SYSTEMS WITHOUT THE EXPRESS WRITTEN APPROVAL OF THE PRESIDENT OF FAIRCHILD SEMICONDUCTOR CORPORATION. As used herein:

1. Life support devices or systems are devices or systems which, (a) are intended for surgical implant into the body, or (b) support or sustain life, and (c) whose failure to perform when properly used in accordance with instructions for use provided in the labeling, can be reasonably expected to result in a significant injury to the user.
2. A critical component in any component of a life support device or system whose failure to perform can be reasonably expected to cause the failure of the life support device or system, or to affect its safety or effectiveness.

www.fairchildsemi.com