Excellent Integrated System Limited

Stocking Distributor

Click to view price, real time Inventory, Delivery & Lifecycle Information:

NorComp
6813W3K103L001

For any questions, you can email us directly:
sales@integrated-circuit.com

DESCRIPTION: POWER - VERTICAL BOARD - MALE

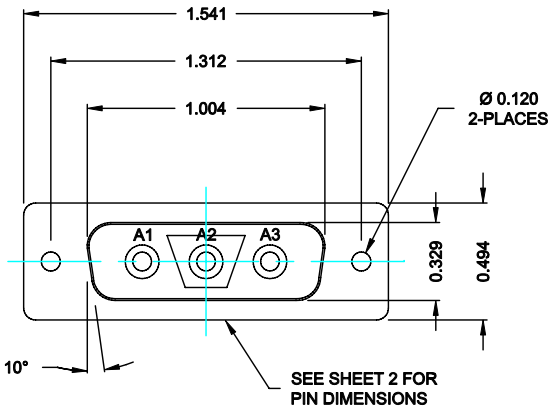

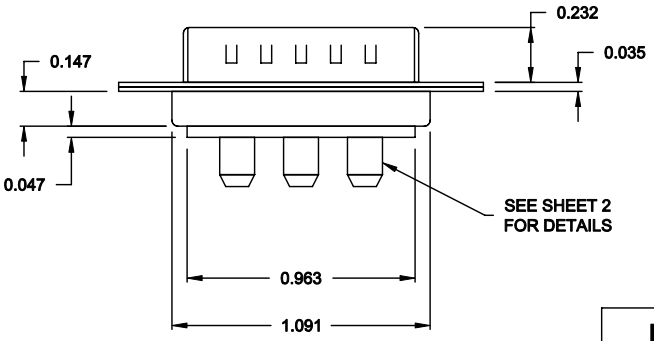

SPECIFICATIONS:

ELECTRICAL:

INSULATOR RESISTANCE:	5,000 MegOHMS Min.
DIELECTRIC WITHSTANDING:	1,000VAC r.m.s.
OPERATING TEMPERATURE:	-55° C ~ +125° C
CONTACT RESISTANCE:	30 MilliOHMS Max.
POWER PINS:	SEE PART No. BELOW

MECHANICAL:

CONTACT INSERTION FORCE:	4.5 Kg Max.
CONTACT SEPARATOR FORCE:	0.3Kg Min.

MATERIALS:

CONTACTS:	BRASS
INSULATOR:	PBT UL94V-0 RATED, 230°C PROCESS TEMP.
SHELL:	STEEL

FINISH:

SHELL:	NICKEL

6813W3K103L001

00 = 20 / 40 AMPS

RoHS COMPLIANT

THESE DRAWINGS AND SPECIFICATIONS ARE THE PROPERTY OF NorComp AND SHALL NOT BE REPRODUCED, COPIED OR USED AS THE BASIS FOR THE MANUFACTURE OF SALE OF APPARATUS WITHOUT WRITTEN PERMISSION.

NorComp

DRAWN: C. SMITH		DATE: 09-19-06	
CHECKED: X		DATE: X	
SCALE: N.T.S.	SHEET 1 OF 2		REV 0
DWG NO. 6813W3K103L001			

DESCRIPTION: 681 SERIES CONTACTS

NOTE:
POWER CONTACTS COME
PRE-LOADED INTO INSULATORS

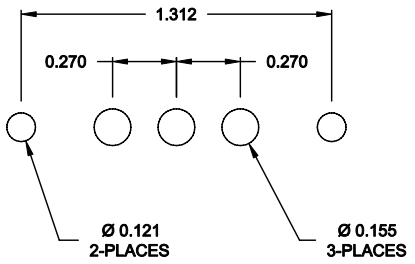

RECOMMENDED PCB LAYOUT

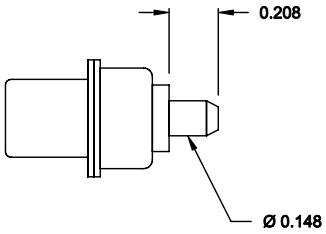

POWER CONTACTS

RoHS COMPLIANT

THESE DRAWINGS AND SPECIFICATIONS ARE THE PROPERTY OF NorComp AND SHALL NOT BE REPRODUCED, COPIED OR USED AS THE BASIS FOR THE MANUFACTURE OF SALE OF APPARATUS WITHOUT WRITTEN PERMISSION.

NorComp

DRAWN: C. SMITH		DATE: 09-19-06	
CHECKED: X		DATE: X	
SCALE: N.T.S.	SHEET 2 OF 2		REV 0
DWG NO. 6813W3K103L001			