Excellent Integrated System Limited

Stocking Distributor

Click to view price, real time Inventory, Delivery & Lifecycle Information:

Bourns Inc.
SDR0703-100KL

For any questions, you can email us directly:
sales@integrated-circuit.com

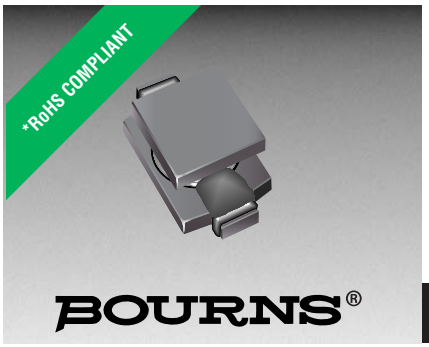

Features

- Available in E12 series
- Low height of only 2.7 mm
- High Isat of 3.2 Amps
- RoHS compliant*

Applications

- Input/output of DC/DC converters
- Power supplies for:
  - Portable communication equipment
  - Camcorders
  - LCD TVs
  - Car radios

SDR0703 Series - SMD Power Inductors

Electrical Specifications

Bourns Part No.	Inductance 100 kHz (µH)	Tol. %	Q Ref.	Test Frequency (MHz)	SRF Min. (MHz)	RDC Max. (Ω)	I rms Max. (A)	I sat Typ. (A)
SDR0703-1R0ML	1.0	± 20	25	7.96	160.0	0.042	2.20	3.20
SDR0703-1R2ML	1.2	± 20	25	7.96	145.0	0.047	2.00	3.00
SDR0703-1R8ML	1.8	± 20	25	7.96	105.0	0.052	1.90	2.70
SDR0703-2R2ML	2.2	± 20	24	7.96	95.0	0.060	1.80	2.60
SDR0703-2R7ML	2.7	± 20	23	7.96	80.0	0.065	1.70	2.50
SDR0703-3R3ML	3.3	± 20	23	7.96	65.0	0.075	1.65	2.35
SDR0703-3R9ML	3.9	± 20	22	7.96	70.0	0.080	1.58	2.25
SDR0703-4R7ML	4.7	± 20	20	7.96	60.0	0.100	1.50	2.10
SDR0703-5R6ML	5.6	± 20	20	7.96	56.0	0.105	1.40	2.00
SDR0703-6R8ML	6.8	± 20	20	7.96	45.0	0.115	1.30	1.90
SDR0703-8R2ML	8.2	± 20	20	7.96	40.0	0.150	1.10	1.50
SDR0703-100KL	10	± 10	23	2.52	36.0	0.170	1.00	1.40
SDR0703-120KL	12	± 10	20	2.52	36.0	0.180	0.90	1.30
SDR0703-150KL	15	± 10	23	2.52	30.0	0.240	0.75	1.12
SDR0703-180KL	18	± 10	20	2.52	30.0	0.280	0.70	1.05
SDR0703-220KL	22	± 10	20	2.52	26.0	0.300	0.65	0.95
SDR0703-270KL	27	± 10	20	2.52	20.0	0.400	0.60	0.88
SDR0703-330KL	33	± 10	17	2.52	20.0	0.450	0.56	0.82
SDR0703-390KL	39	± 10	18	2.52	18.0	0.550	0.50	0.73
SDR0703-470KL	47	± 10	20	2.52	15.0	0.720	0.40	0.64
SDR0703-560KL	56	± 10	20	2.52	13.0	0.800	0.39	0.60
SDR0703-680KL	68	± 10	18	2.52	13.0	0.900	0.38	0.56
SDR0703-820KL	82	± 10	18	2.52	12.0	1.18	0.33	0.47
SDR0703-101KL	100	± 10	33	0.796	11.0	1.56	0.27	0.40
SDR0703-121KL	120	± 10	32	0.796	10.0	1.75	0.26	0.37
SDR0703-151KL	150	± 10	30	0.796	9.0	2.00	0.25	0.34
SDR0703-181KL	180	± 10	33	0.796	7.0	2.70	0.19	0.30
SDR0703-221KL	220	± 10	31	0.796	7.0	3.00	0.18	0.28
SDR0703-271KL	270	± 10	30	0.796	7.0	3.60	0.17	0.22
SDR0703-331KL	330	± 10	33	0.796	6.0	4.80	0.16	0.19
SDR0703-391KL	390	± 10	36	0.796	5.5	6.20	0.14	0.18
SDR0703-471KL	470	± 10	33	0.796	5.0	7.00	0.13	0.16
SDR0703-561KL	560	± 10	36	0.796	4.2	9.20	0.11	0.15
SDR0703-681KL	680	± 10	32	0.796	4.0	10.50	0.10	0.15
SDR0703-821KL	820	± 10	32	0.796	3.6	12.00	0.09	0.14
SDR0703-102KL	1000	± 10	30	0.252	3.2	14.20	0.08	0.13

General Specifications

Test Voltage.....0.1 V
Reflow Soldering ...230 °C, 50 sec. max.
Operating Temperature ..-40 °C to +125 °C
(Temperature rise included)
Storage Temperature..-40 °C to +125 °C
Resistance to Soldering Heat
.....260 °C for 10 sec.

Materials

Core .....Ferrite
Wire .....Enameled copper 130 °C
Base.....LCP
Adhesive.....6020H-6
Terminal .....Ag/Sn
Rated Current
.....Ind. drop 10 % typ. at Isat
Temperature Rise .....20 °C max.
at rated Irms
Packaging .....500 pcs. per reel

Product Dimensions

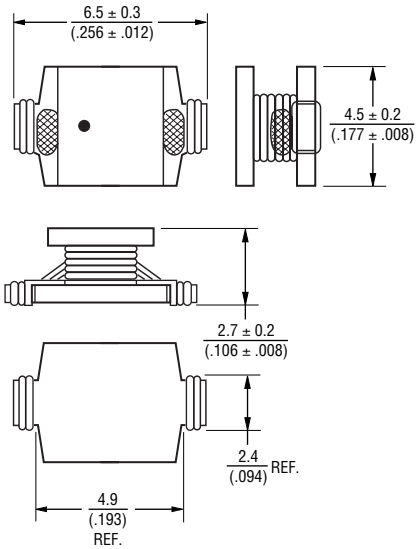

Recommended Layout

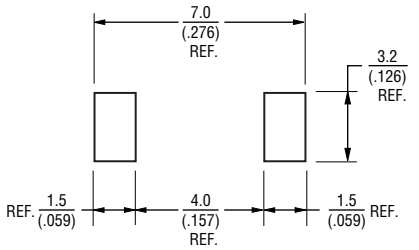

DIMENSIONS: MM / (INCHES)

Electrical Schematic

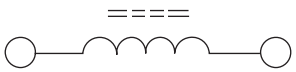

*RoHS Directive 2002/95/EC Jan 27, 2003 including Annex
Specifications are subject to change without notice.
Customers should verify actual device performance in their specific applications.

SDR0703 Series - SMD Power Inductors

Typical Part Marking

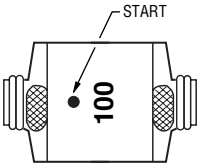

Packaging Specifications

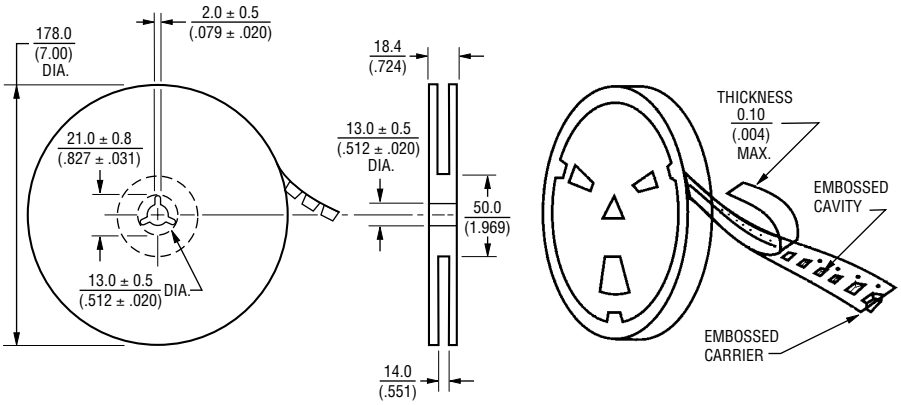

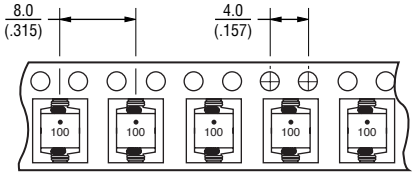

QTY: 500 PCS. PER REEL

DIMENSIONS: MM / (INCHES)

Specifications are subject to change without notice.
Customers should verify actual device performance in their specific applications.