Excellent Integrated System Limited

Stocking Distributor

Click to view price, real time Inventory, Delivery & Lifecycle Information:

Cypress Semiconductor
CY62147EV18LL-45BVXI

For any questions, you can email us directly:
sales@integrated-circuit.com

Distributor of Cypress Semiconductor: Excellent Integrated System Limited
Datasheet of CY62147EV18LL-45BVXI - IC SRAM 4MBIT 45NS 48VFBGA
Contact us: sales@integrated-circuit.com Website: www.integrated-circuit.com

CY62147EV18 MoBL2™

4-Mbit (256K x 16) Static RAM

Features

- **Very high speed: 45 ns**
- **Wide voltage range: 1.65V–2.25V**
- **Pin-compatible with CY62147DV18**
- **Ultra low standby power**
  - **Typical standby current: 1 μA**
  - **Maximum standby current: 7 μA**
- **Ultra-low active power**
  - **Typical active current: 2 mA @ f = 1 MHz**
- **Ultra low standby power**
- **Easy memory expansion with $\overline{CE}$, and $\overline{OE}$ features**
- **Automatic power-down when deselected**
- **CMOS for optimum speed/power**
- **Available in a 48-ball Pb-free VFBGA package**

Functional Description[1]

The CY62147EV18 is a high-performance CMOS static RAM organized as 256K words by 16 bits. This device features advanced circuit design to provide ultra-low active current. This is ideal for providing More Battery Life™ (MoBL®) in portable applications such as cellular telephones. The device also has an automatic power-down feature that significantly reduces power consumption when addresses are not toggling. The device can also be put into standby mode reducing power consumption by more than 99% when deselected ($\overline{CE}$ HIGH or both $\overline{BLE}$ and $\overline{BHE}$ are HIGH). The input/output pins (I/O_0 through I/O_{15}) are placed in a high-impedance state when: deselected ($\overline{CE}$ HIGH), outputs are disabled ($\overline{OE}$ HIGH), both Byte High Enable and Byte Low Enable are disabled ($\overline{BHE}$, $\overline{BLE}$ HIGH), or during a write operation ($\overline{CE}$ LOW and $\overline{WE}$ LOW).

Writing to the device is accomplished by taking Chip Enable ($\overline{CE}$) and Write Enable ($\overline{WE}$) inputs LOW. If Byte Low Enable ($\overline{BLE}$) is LOW, then data from I/O pins (I/O_0 through I/O_7), is written into the location specified on the address pins (A_0 through A_{17}). If Byte High Enable ($\overline{BHE}$) is LOW, then data from I/O pins (I/O_8 through I/O_{15}) is written into the location specified on the address pins (A_0 through A_{17}).

Reading from the device is accomplished by taking Chip Enable ($\overline{CE}$) and Output Enable ($\overline{OE}$) LOW while forcing the Write Enable ($\overline{WE}$) HIGH. If Byte Low Enable ($\overline{BLE}$) is LOW, then data from the memory location specified by the address pins will appear on I/O_0 to I/O_7. If Byte High Enable ($\overline{BHE}$) is LOW, then data from memory will appear on I/O_8 to I/O_{15}. See the truth table at the back of this data sheet for a complete description of read and write modes.

The CY62147EV18 is available in a 48-ball VFBGA package.

Logic Block Diagram

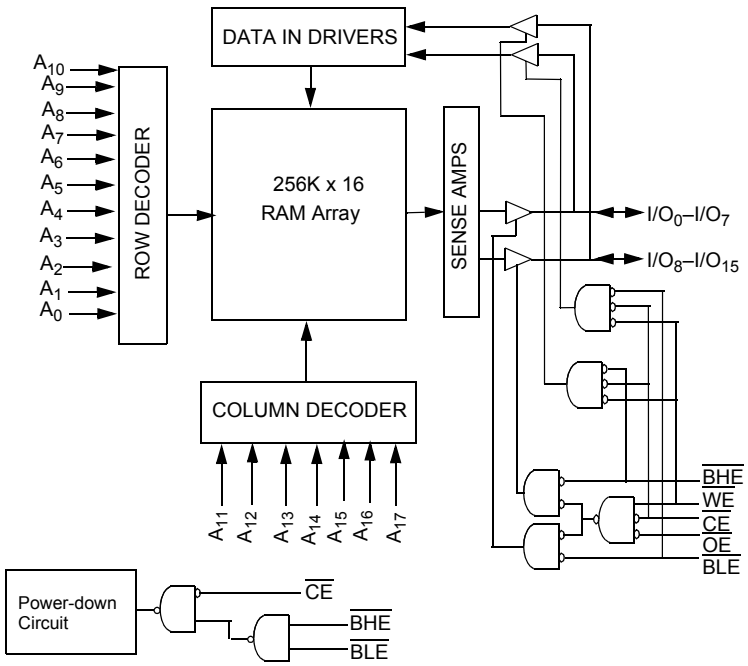

Note:
1. For best practice recommendations, please refer to the Cypress application note "System Design Guidelines" on http://www.cypress.com.

Distributor of Cypress Semiconductor: Excellent Integrated System Limited
Datasheet of CY62147EV18LL-45BVXI - IC SRAM 4MBIT 45NS 48VFBGA
Contact us: sales@integrated-circuit.com Website: www.integrated-circuit.com

Pin Configuration[2, 3]

48-ball VFBGA Pinout
Top View

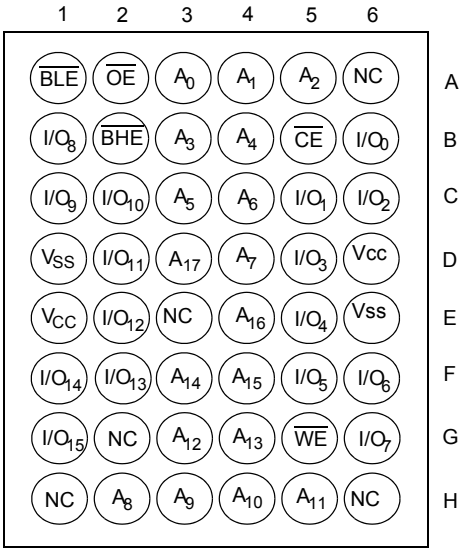

Product Portfolio

Product	V_{CC} Range (V)			Speed (ns)	Power Dissipation					
					Operating I_{CC} (mA)				Standby I_{SB2} (μA)	
					f = 1MHz		f = f_{max}			
	Min.	Typ.[4]	Max.		Typ.[4]	Max.	Typ.[4]	Max.	Typ.[4]	Max.
CY62147EV18-45LL	1.65	1.8	2.25	45	2	2.5	15	20	1	7

Notes:
2. NC pins are not connected on the die.
3. Pins H1, G2, and H6 in the VFBGA package are address expansion pins for 8 Mb, 16 Mb and 32 Mb, respectively.
4. Typical values are included for reference only and are not guaranteed or tested. Typical values are measured at $V_{CC} = V_{CC(typ.)}$, $T_A = 25°C$.

Maximum Ratings

(Above which the useful life may be impaired. For user guidelines, not tested.)

Storage Temperature .....–65°C to + 150°C

Ambient Temperature with Power Applied .....–55°C to + 125°C

Supply Voltage to Ground Potential .....–0.2V to + 2.45V (V_{CCMAX} + 0.2V)

DC Voltage Applied to Outputs in High-Z State[5,6].....–0.2V to 2.45V (V_{CCMAX} + 0.2V)

DC Input Voltage[5,6]..... –0.2V to 2.45V (V_{CCMAX} + 0.2V)

Output Current into Outputs (LOW) ..... 20 mA

Static Discharge Voltage ..... > 2001V (per MIL-STD-883, Method 3015)

Latch-up Current .....>200 mA

Operating Range

Device	Range	Ambient Temperature	V_{CC} [7]
CY62147EV18	Industrial	–40°C to +85°C	1.65V to 2.25V

Electrical Characteristics (Over the Operating Range)

Parameter	Description	Test Conditions		45 ns Min.	45 ns Typ.[4]	45 ns Max.	Unit
V_{OH}	Output HIGH Voltage	I_{OH} = –0.1 mA	V_{CC} = 1.65V	1.4			V
V_{OL}	Output LOW Voltage	I_{OL} = 0.1 mA	V_{CC} = 1.65V			0.2	V
V_{IH}	Input HIGH Voltage	V_{CC} =1.65V to 2.25V		1.4		V_{CC}+ 0.2V	V
V_{IL}	Input LOW Voltage	V_{CC} =1.65V to 2.25V		–0.2		0.4	V
I_{IX}	Input Leakage Current	GND ≤ V_I ≤ V_{CC}		–1		+1	µA
I_{OZ}	Output Leakage Current	GND ≤ V_O ≤ V_{CC}, Output Disabled		–1		+1	µA
I_{CC}	V_{CC} Operating Supply Current	f = f_{MAX} = 1/t_{RC}	$V_{CC(max)}$=2.25V I_{OUT} = 0 mA CMOS levels		15	20	mA
		f = 1 MHz	$V_{CC(max)}$=2.25V		2	2.5	mA
I_{SB1}	Automatic CE Power-down Current — CMOS Inputs	$\overline{CE}$ ≥ V_{CC}–0.2V, V_{IN}≥V_{CC} – 0.2V, V_{IN} ≤ 0.2V) f = f_{MAX} (Address and Data Only), f = 0 (OE, WE, BHE and BLE)	$V_{CC(max)}$=2.25V		1	7	µA
I_{SB2}	Automatic CE Power-down Current — CMOS Inputs	$\overline{CE}$ ≥ V_{CC} – 0.2V, V_{IN} ≥ V_{CC} – 0.2V or V_{IN} ≤ 0.2V, f = 0	$V_{CC(max)}$=2.25V		1	7	µA

Capacitance (for all Packages) [8]

Parameter	Description	Test Conditions	Max.	Unit
C_{IN}	Input Capacitance	T_A = 25°C, f = 1 MHz, V_{CC} = $V_{CC(typ)}$	10	pF
C_{OUT}	Output Capacitance		10	pF

Note:
5. $V_{IL(min.)}$ = –2.0V for pulse durations less than 20 ns.
6. $V_{IH(max)}$=V_{CC}+0.5V for pulse durations less than 20 ns.
7. Full device AC operation assumes a minimum of 100 µs ramp time from 0 to V_{cc}(min) and 200 µs wait time after V_{cc} stabilization.
8. Tested initially and after any design or process changes that may affect these parameters.

Thermal Resistance

Parameter	Description	Test Conditions	VFBGA Package	Unit
Θ_{JA}	Thermal Resistance (Junction to Ambient)[8]	Still Air, soldered on a 3 × 4.5 inch, two-layer printed circuit board	75	°C/W
Θ_{JC}	Thermal Resistance (Junction to Case)[8]		10	°C/W

AC Test Loads and Waveforms

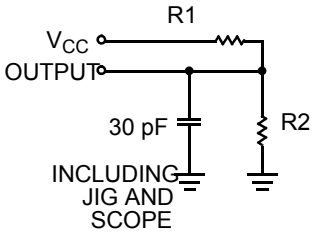

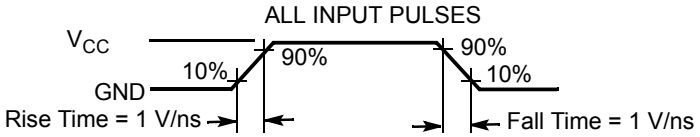

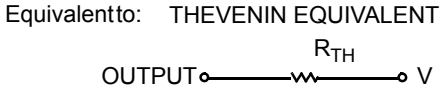

Parameters	1.80V	Unit
R1	13500	Ω
R2	10800	Ω
R_{TH}	6000	Ω
V_{TH}	0.80	V

Data Retention Characteristics (Over the Operating Range)

Parameter	Description	Conditions	Min.	Typ.[4]	Max.	Unit
V_{DR}	V_{CC} for Data Retention		1.0			V
I_{CCDR}	Data Retention Current	V_{CC}= 1.0V $\overline{CE} \geq V_{CC} - 0.2V$, $V_{IN} \geq V_{CC} - 0.2V$ or $V_{IN} \leq 0.2V$		0.5	3	µA
t_{CDR}[7]	Chip Deselect to Data Retention Time		0			ns
t_R[9]	Operation Recovery Time		t_{RC}			ns

Data Retention Waveform[10]

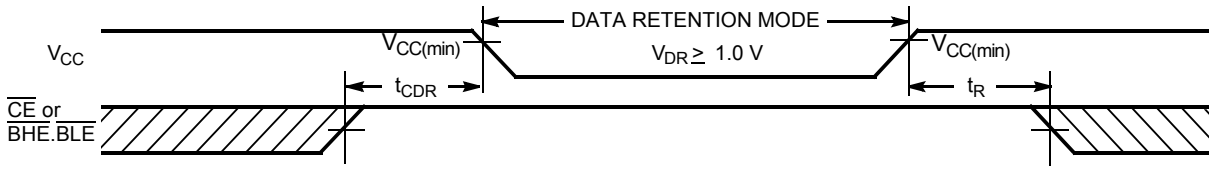

Notes:
9. Full device operation requires linear V_{CC} ramp from V_{DR} to $V_{CC(min.)} \geq 100$ µs or stable at $V_{CC(min.)} \geq 100$µs.
10. BHE.BLE is the AND of both $\overline{BHE}$ and $\overline{BLE}$. Chip can be deselected by either disabling the chip enable signals or by disabling both $\overline{BHE}$ and $\overline{BLE}$.

Distributor of Cypress Semiconductor: Excellent Integrated System Limited
Datasheet of CY62147EV18LL-45BVXI - IC SRAM 4MBIT 45NS 48VFBGA
Contact us: sales@integrated-circuit.com Website: www.integrated-circuit.com

Switching Characteristics (Over the Operating Range) [11]

Parameter	Description	45 ns		Unit
		Min.	Max.	
Read Cycle				
t_{RC}	Read Cycle Time	45		ns
t_{AA}	Address to Data Valid		45	ns
t_{OHA}	Data Hold from Address Change	10		ns
t_{ACE}	$\overline{CE}$ LOW to Data Valid		45	ns
t_{DOE}	$\overline{OE}$ LOW to Data Valid		22	ns
t_{LZOE}	$\overline{OE}$ LOW to LOW Z[12]	5		ns
t_{HZOE}	$\overline{OE}$ HIGH to High Z[12, 13]		18	ns
t_{LZCE}	$\overline{CE}$ LOW to Low Z[12]	10		ns
t_{HZCE}	$\overline{CE}$ HIGH to High Z[12, 13]		18	ns
t_{PU}	$\overline{CE}$ LOW to Power-up	0		ns
t_{PD}	$\overline{CE}$ HIGH to Power-down		45	ns
t_{DBE}	$\overline{BLE}/\overline{BHE}$ LOW to Data Valid		45	ns
t_{LZBE}	$\overline{BLE}/\overline{BHE}$ LOW to Low Z[12]	10		ns
t_{HZBE}	$\overline{BLE}/\overline{BHE}$ HIGH to HIGH Z[12, 13]		18	ns
Write Cycle[14]				
t_{WC}	Write Cycle Time	45		ns
t_{SCE}	$\overline{CE}$ LOW to Write End	35		ns
t_{AW}	Address Set-up to Write End	35		ns
t_{HA}	Address Hold from Write End	0		ns
t_{SA}	Address Set-up to Write Start	0		ns
t_{PWE}	$\overline{WE}$ Pulse Width	35		ns
t_{BW}	$\overline{BLE}/\overline{BHE}$ LOW to Write End	35		ns
t_{SD}	Data Set-up to Write End	25		ns
t_{HD}	Data Hold from Write End	0		ns
t_{HZWE}	$\overline{WE}$ LOW to High-Z[12, 13]		18	ns
t_{LZWE}	$\overline{WE}$ HIGH to Low-Z[12]	10		ns

Notes:

11. Test conditions for all parameters other than three-state parameters assume signal transition time of 1V/ns or less, timing reference levels of $V_{CC(typ)}/2$, input pulse levels of 0 to $V_{CC(typ.)}$, and output loading of the specified I_{OL}/I_{OH} as shown in the "AC Test Loads and Waveforms" section.
12. At any given temperature and voltage condition, t_{HZCE} is less than t_{LZCE}, t_{HZBE} is less than t_{LZBE}, t_{HZOE} is less than t_{LZOE}, and t_{HZWE} is less than t_{LZWE} for any given device.
13. t_{HZOE}, t_{HZCE}, t_{HZBE}, and t_{HZWE} transitions are measured when the outputs enter a high impedence state
14. The internal Write time of the memory is defined by the overlap of $\overline{WE}$, $\overline{CE} = V_{IL}$, $\overline{BHE}$ and/or $\overline{BLE} = V_{IL}$. All signals must be ACTIVE to initiate a write and any of these signals can terminate a write by going INACTIVE. The data input set-up and hold timing should be referenced to the edge of the signal that terminates the write.

Distributor of Cypress Semiconductor: Excellent Integrated System Limited
Datasheet of CY62147EV18LL-45BVXI - IC SRAM 4MBIT 45NS 48VFBGA
Contact us: sales@integrated-circuit.com Website: www.integrated-circuit.com

Switching Waveforms

Read Cycle 1 (Address Transition Controlled)[15, 16]

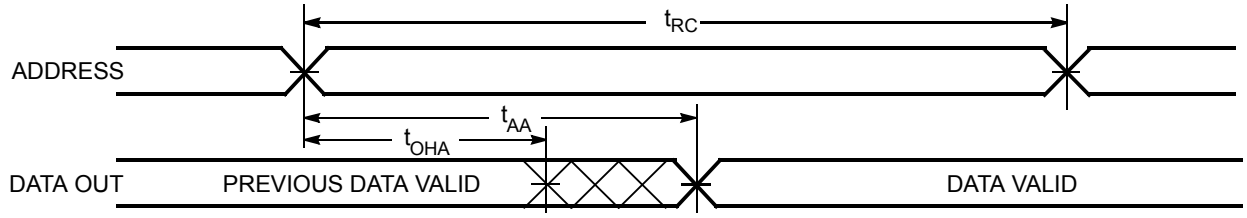

Read Cycle No. 2 ($\overline{OE}$ Controlled)[16, 17]

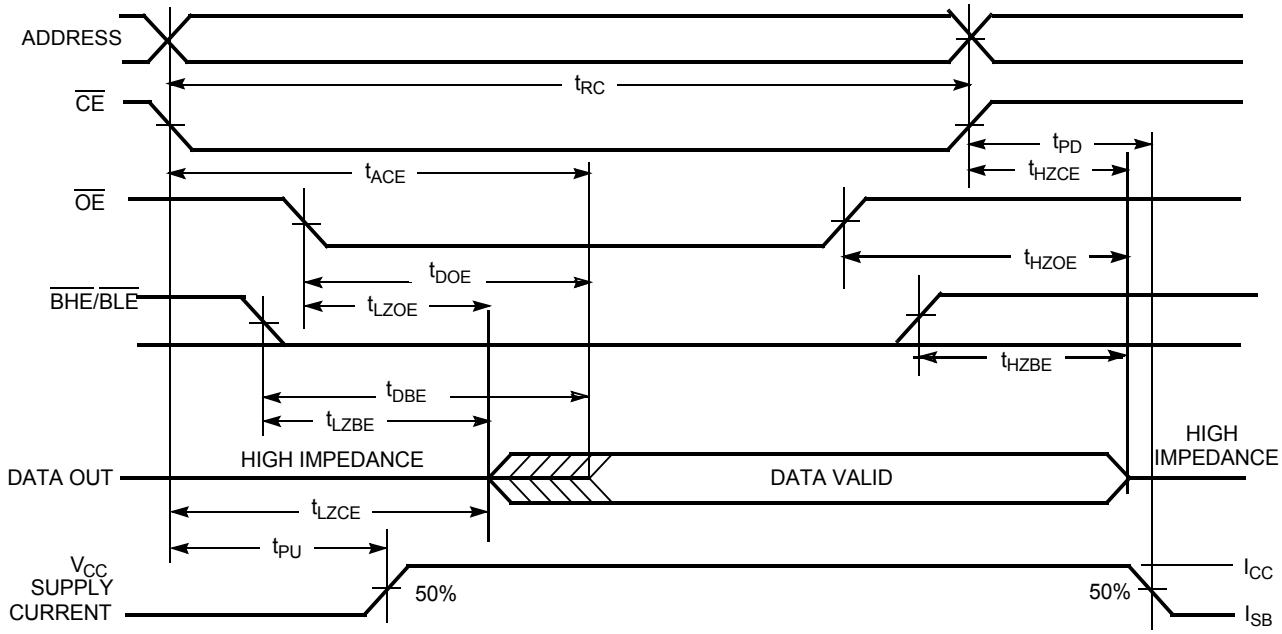

Notes:
15. The device is continuously selected. $\overline{OE}$, $\overline{CE}$ = V_{IL}, $\overline{BHE}$ and/or $\overline{BLE}$ = V_{IL}.
16. $\overline{WE}$ is HIGH for read cycle.
17. Address valid prior to or coincident with $\overline{CE}$ and $\overline{BHE}$, $\overline{BLE}$ transition LOW.

Distributor of Cypress Semiconductor: Excellent Integrated System Limited
Datasheet of CY62147EV18LL-45BVXI - IC SRAM 4MBIT 45NS 48VFBGA
Contact us: sales@integrated-circuit.com Website: www.integrated-circuit.com

Switching Waveforms (continued)

Write Cycle No. 1 ($\overline{WE}$ Controlled)[14, 18, 19]

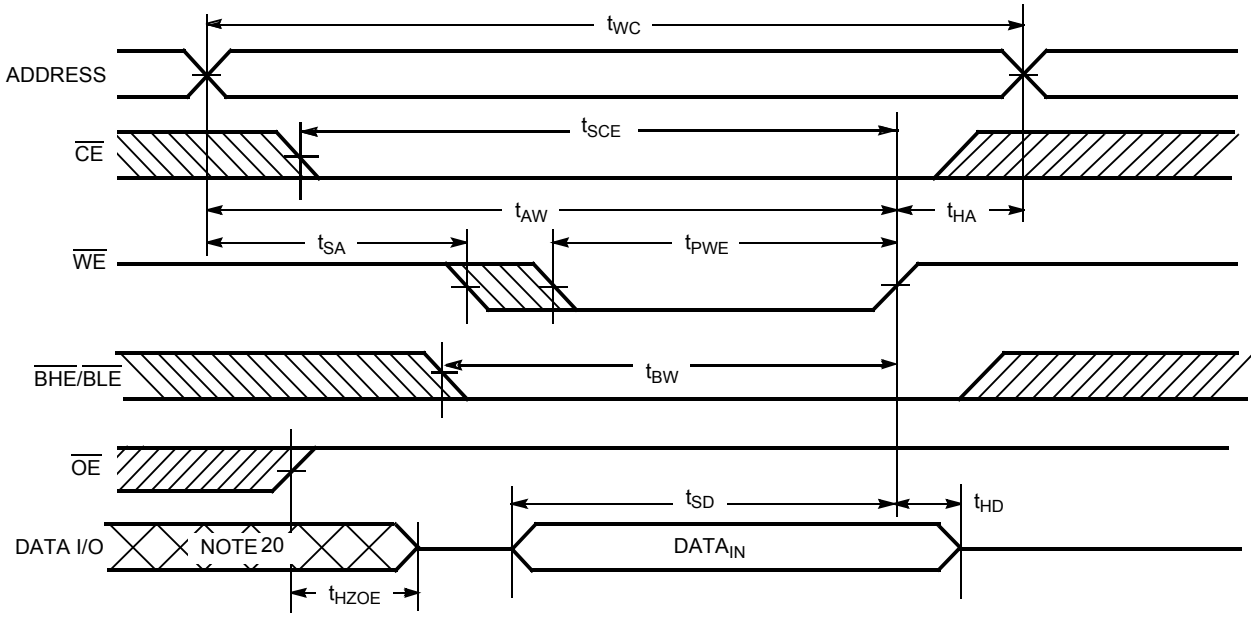

Write Cycle No. 2 ($\overline{CE}$ Controlled)[14, 18, 19]

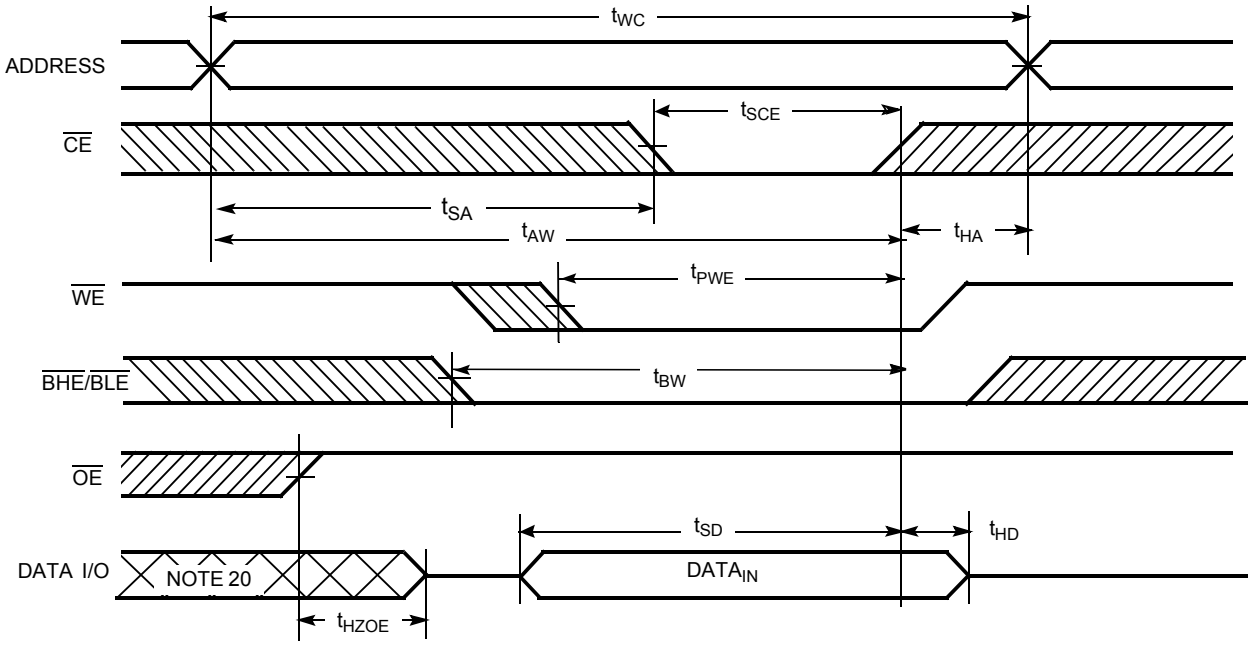

Notes:
18. Data I/O is high impedance if $\overline{OE} = V_{IH}$.
19. If $\overline{CE}$ goes HIGH simultaneously with $\overline{WE} = V_{IH}$, the output remains in a high-impedance state.
20. During this period, the I/Os are in output state and input signals should not be applied.

Distributor of Cypress Semiconductor: Excellent Integrated System Limited
Datasheet of CY62147EV18LL-45BVXI - IC SRAM 4MBIT 45NS 48VFBGA
Contact us: sales@integrated-circuit.com Website: www.integrated-circuit.com

Switching Waveforms (continued)

Write Cycle No. 3 (WE Controlled, OE LOW)[19]

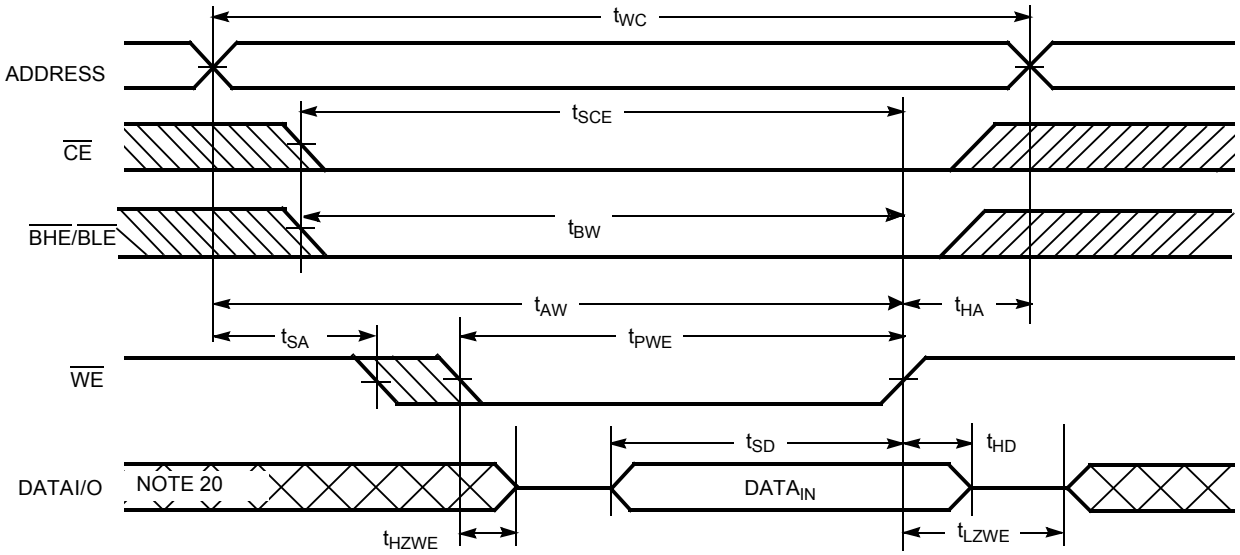

Write Cycle No. 4 (BHE/BLE Controlled, OE LOW)[19]

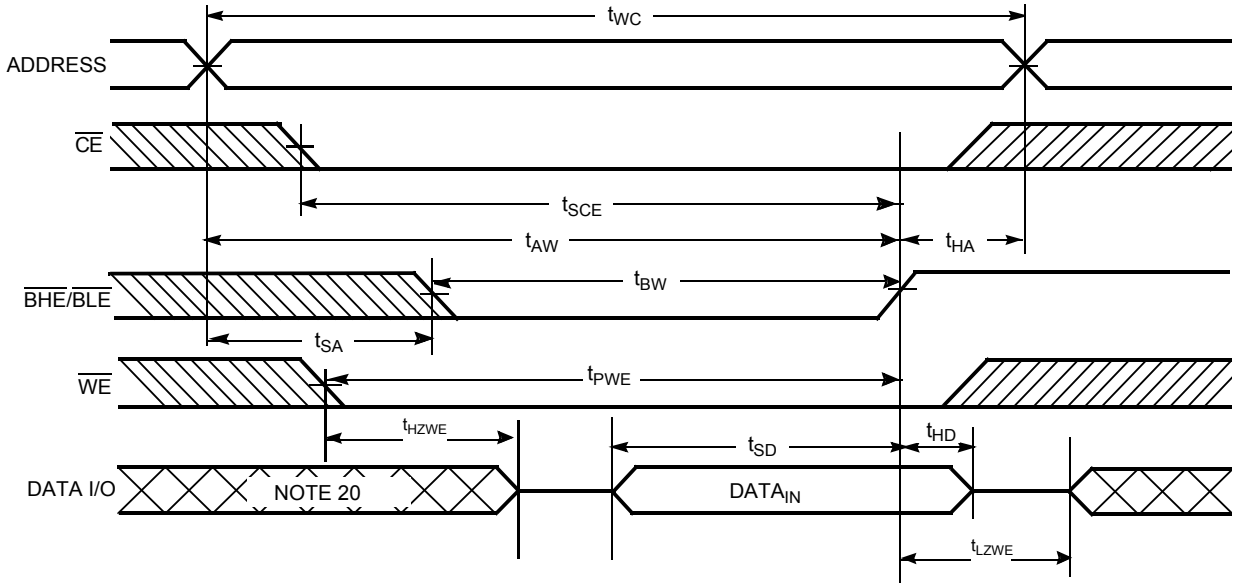

Distributor of Cypress Semiconductor: Excellent Integrated System Limited
Datasheet of CY62147EV18LL-45BVXI - IC SRAM 4MBIT 45NS 48VFBGA
Contact us: sales@integrated-circuit.com Website: www.integrated-circuit.com

Truth Table

$\overline{CE}$	$\overline{WE}$	$\overline{OE}$	$\overline{BHE}$	$\overline{BLE}$	Inputs/Outputs	Mode	Power
H	X	X	X	X	High Z	Deselect/Power-down	Standby (I_{SB})
L	X	X	H	H	High Z	Deselect/Power-down	Standby (I_{SB})
L	H	L	L	L	Data Out (I/O_O–I/O_{15})	Read	Active (I_{CC})
L	H	L	H	L	Data Out (I/O_O–I/O_7); I/O_8–I/O_{15} in High Z	Read	Active (I_{CC})
L	H	L	L	H	Data Out (I/O_8–I/O_{15}); I/O_0–I/O_7 in High Z	Read	Active (I_{CC})
L	H	H	L	L	High Z	Output Disabled	Active (I_{CC})
L	H	H	H	L	High Z	Output Disabled	Active (I_{CC})
L	H	H	L	H	High Z	Output Disabled	Active (I_{CC})
L	L	X	L	L	Data In (I/O_O–I/O_{15})	Write	Active (I_{CC})
L	L	X	H	L	Data In (I/O_O–I/O_7); I/O_8–I/O_{15} in High Z	Write	Active (I_{CC})
L	L	X	L	H	Data In (I/O_8–I/O_{15}); I/O_0–I/O_7 in High Z	Write	Active (I_{CC})

Ordering Information

Speed (ns)	Ordering Code	Package Diagram	Package Type	Operating Range
45	CY62147EV18LL-45BVXI	51-85150	48-ball Very Fine Pitch Ball Grid Array Pb-Free	Industrial

Please contact your local Cypress sales representative for availability of other parts

Distributor of Cypress Semiconductor: Excellent Integrated System Limited
Datasheet of CY62147EV18LL-45BVXI - IC SRAM 4MBIT 45NS 48VFBGA
Contact us: sales@integrated-circuit.com Website: www.integrated-circuit.com

Package Diagram

48-pin VFBGA (6 x 8 x 1 mm) (51-85150)

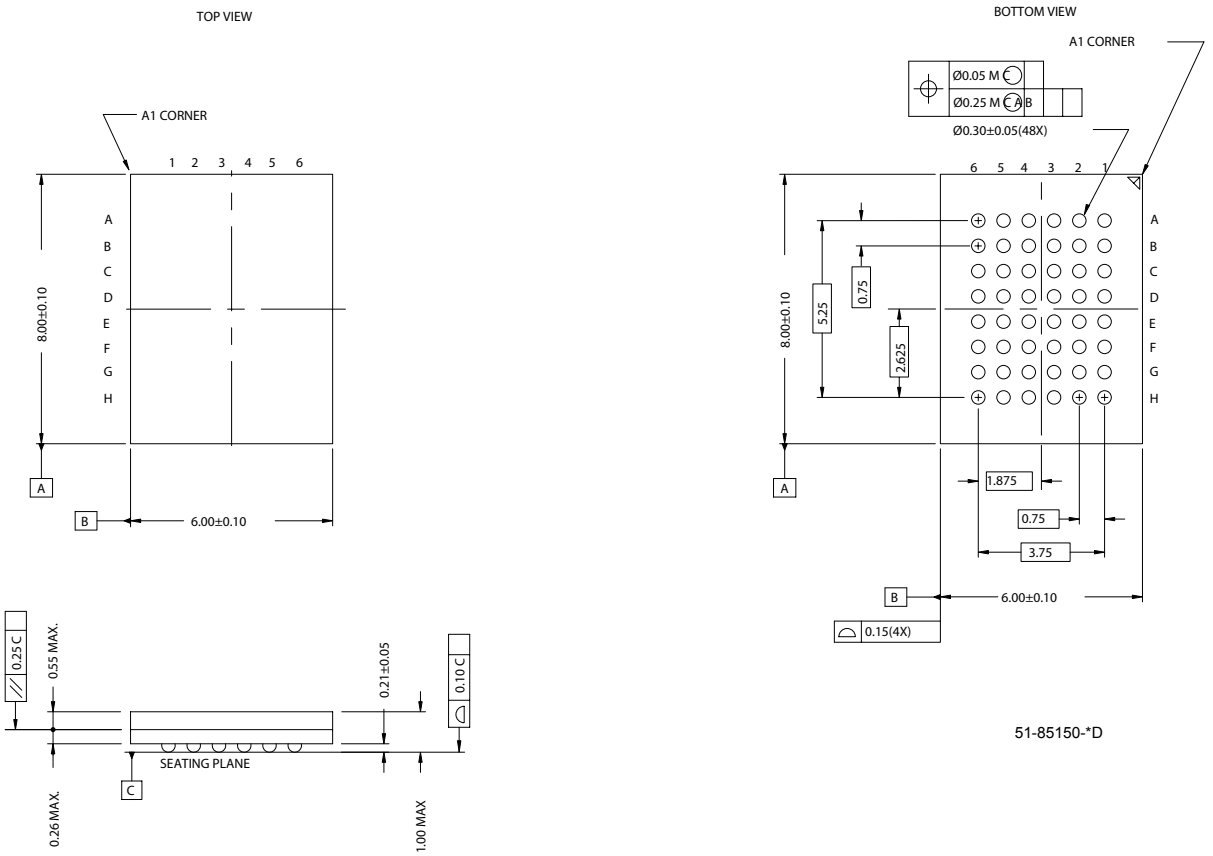

MoBL is a registered trademark, and More Battery Life is a trademark, of Cypress Semiconductor. All product and company names mentioned in this document are the trademarks of their respective holders.

© Cypress Semiconductor Corporation, 2005. The information contained herein is subject to change without notice. Cypress Semiconductor Corporation assumes no responsibility for the use of any circuitry other than circuitry embodied in a Cypress product. Nor does it convey or imply any license under patent or other rights. Cypress products are not warranted nor intended to be used for medical, life support, life saving, critical control or safety applications, unless pursuant to an express written agreement with Cypress. Furthermore, Cypress does not authorize its products for use as critical components in life-support systems where a malfunction or failure may reasonably be expected to result in significant injury to the user. The inclusion of Cypress products in life-support systems application implies that the manufacturer assumes all risk of such use and in doing so indemnifies Cypress against all charges.

Distributor of Cypress Semiconductor: Excellent Integrated System Limited
Datasheet of CY62147EV18LL-45BVXI - IC SRAM 4MBIT 45NS 48VFBGA
Contact us: sales@integrated-circuit.com Website: www.integrated-circuit.com

Document History Page

Document Title:CY62147EV18 MoBL2™ 4-Mbit (256K x 16) Static RAM Document Number: 38-05441				
REV.	**ECN NO.**	**Issue Date**	**Orig. of Change**	**Description of Change**
**	201580	01/08/04	AJU	New Data Sheet
*A	247009	See ECN	SYT	Changed from Advance Information to Preliminary Moved Product Portfolio to Page 2 Changed V_{CCMax} from 2.20 to 2.25 V Changed V_{CC} stabilization time in footnote #8 from 100 µs to 200 µs Removed Footnote #15 (t_{LZBE}) from Previous Revision Changed I_{CCDR} from 2.0 µA to 2.5 µA Changed typo in Data Retention Characteristics (t_R) from 100 µs to t_{RC} ns Changed t_{OHA} from 6 ns to 10 ns for both 35 ns and 45 ns Speed Bin Changed t_{HZOE}, t_{HZBE}, t_{HZWE} from 12 to 15 ns for 35 ns Speed Bin and 15 to 18 ns for 45 ns Speed Bin Changed t_{SCE} and t_{BW} from 25 to 30 ns for 35 ns Speed Bin and 40 to 35 ns for 45 ns Speed Bin Changed t_{HZCE} from 12 to 18 ns for 35 ns Speed Bin and 15 to 22 ns for 45 ns Speed Bin Changed t_{SD} from 15 to 18 ns for 35 ns Speed Bin and 20 to 22 ns for 45 ns Speed Bin Changed t_{DOE} from 15 to 18 ns for 35 ns Speed Bin Changed Ordering Information to include Pb-Free Packages
*B	414820	See ECN	ZSD	Changed from Preliminary to Final Changed the address of Cypress Semiconductor Corporation on Page #1 from “3901 North First Street” to “198 Champion Court” Removed 35ns Speed Bin Removed “L” version of CY62147EV18 Changed ball E3 from DNU to NC Changed I_{CC} (Typ) value from 1.5 mA to 2 mA at f=1 MHz Changed I_{CC} (Max) value from 2 mA to 2.5 mA at f=1 MHz Changed I_{CC} (Typ) value from 12 mA to 15 mA at f=f_{max} Changed I_{SB1} and I_{SB2} Typ. values from 0.7 µA to 1 µA and Max. values from 2.5 µA to 7 µA. Extended undershoot limit to -2V in footnote #5 Changed I_{CCDR} Max. from 2.5 µA to 3 µA. Added I_{CCDR} typical value. Changed t_{LZOE} from 3 ns to 5 ns Changed t_{LZCE}, t_{LZBE} and t_{LZWE} from 6 ns to 10 ns Changed t_{HZCE} from 22 ns to 18 ns Changed t_{PWE} from 30 ns to 35 ns. Changed t_{SD} from 22 ns to 25 ns. Updated the package diagram 48-pin VFBGA from *B to *D Updated the ordering information table and replaced Package Name column with Package Diagram