Excellent Integrated System Limited

Stocking Distributor

Click to view price, real time Inventory, Delivery & Lifecycle Information:

Amphenol Commercial Products
FS1-R26-2000

For any questions, you can email us directly:
sales@integrated-circuit.com

REVISIONS				
REV.	SCN	DESCRIPTION	DATE	APPROVED
C		INITIAL RELEASE	APR 18/06	MA
D		PCB SOLDER PAD WIDTH REVISED FROM .030" TO .014"	FEB 28/07	JLJ
E		TOLERANCE ADDED TO PCB HOLE & LOCATING PIN	FEB 27/07	JLJ
F		FS1-R26-3000 ADDED	APR 05/07	JLJ
G		DIAM. PEG DIM'S. ADDED, TOLERANCE ADDED TO .472	AUG/16/07	JLJ
H		HOUSING MODIFIED	AUG 21/07	JLJ
J		IMPERIAL UNITS REMOVED	OCT 4/07	JLJ

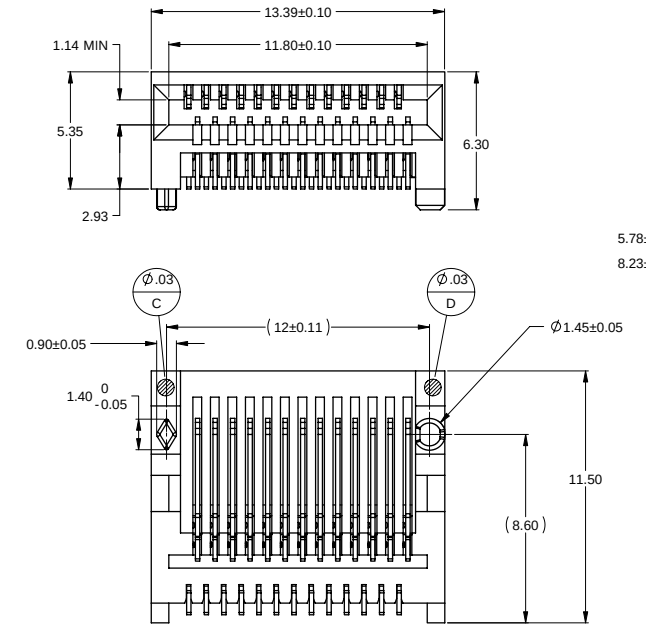

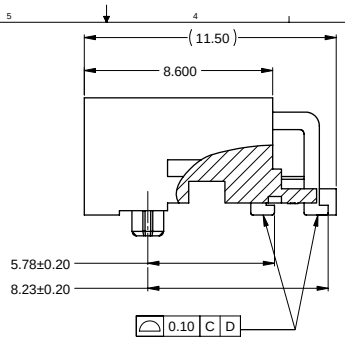

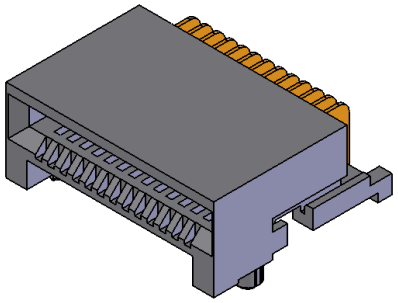

PART NUMBER	PACKAGING	CONTACT PLATING
FS1-R26-2000	TAPE AND REEL	30µ" GOLD OVER 50µ" NICKEL IN CONTACT AREAS 100µ" MATTE TIN OVER 50µ" NICKEL IN SOLDER AREAS
FS1-R26-3000		15µ" GOLD OVER 50µ" NICKEL IN CONTACT AREAS 100µ" MATTE TIN OVER 50µ" NICKEL IN SOLDER AREAS

NOTES:

1) MATERIAL:

HOUSING: SOLDER REFLOW PROCESS COMPATIBLE LCP, UL94V-0

CONTACTS: PHOSPHOR BRONZE

2) ROHS COMPLIANT

3) PERFORMANCE:

ELECTRICAL: 0.5 AMPS MAX. PER CONTACT

MECHANICAL: 250 MATING CYCLES MINIMUM

4) COMPLIES WITH SFF-8086

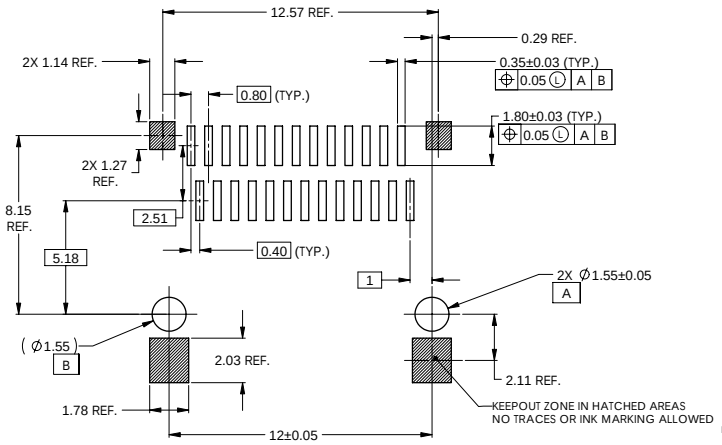

RECOMMENDED PCB LAYOUT

DO NOT SCALE DRAWING

THIS DOCUMENT CONTAINS PROPRIETARY INFORMATION AND SUCH INFORMATION MAY NOT BE DISCLOSED TO OTHERS FOR ANY PURPOSE OR USED FOR MANUFACTURING PURPOSES WITHOUT PERMISSION FROM AMPHENOL CANADA CORP.

	APPROVALS	DATE	
UNLESS OTHERWISE SPECIFIED DIMENSIONS ARE IN MILIMETERS TOLERANCES ARE: DECIMALS .X ± 0.25 .XX ± 0.13 ANGLES ± 2°	DRAWN YK	15/FEB/06	Amphenol Canada Corp.
	DESIGNED YK	15/FEB/06	TITLE SFF, 26 POSITION CONNECTOR
	CHECKED		
	Q.A. APP'D		
ENG. REL. NO. EAR	E. APP'D		SIZE C DWG. NO. P-FS1-R26-X000 REV. J
CODE IDENT. NO. 03554	ENG. APP'D		SCALE NTS PROJECT SFF SHEET 1 OF 1