Excellent Integrated System Limited

Stocking Distributor

Click to view price, real time Inventory, Delivery & Lifecycle Information:

Switchcraft Inc.
2501F

For any questions, you can email us directly:
sales@integrated-circuit.com

2501 F

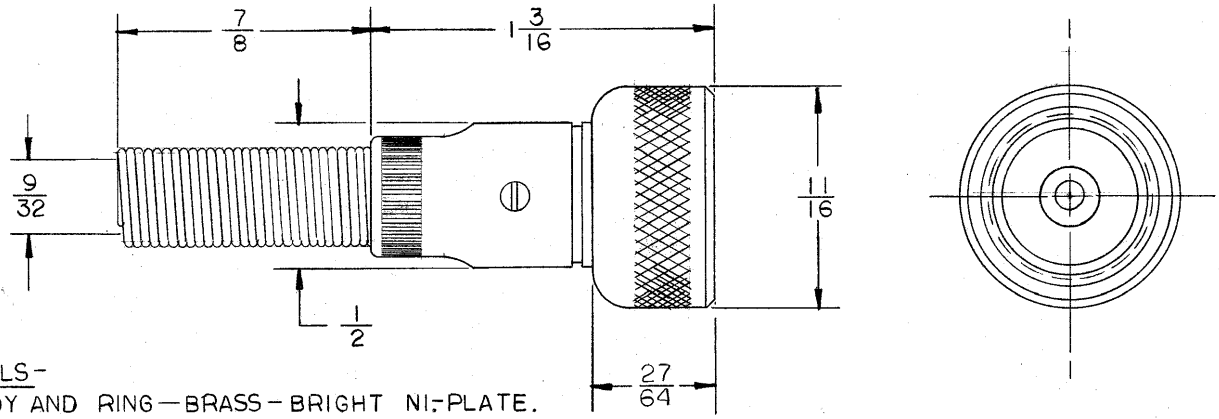

MATERIALS-
1- BODY AND RING—BRASS—BRIGHT NI-PLATE.
2-INSULATOR—PAPER BASE PHENOLIC.
3-CORD PROTECTOR SLEEVE—MUSIC WIRE—TINNED.
4-EYELET—BRASS— HOT TINNED.
5-SET SCREW-STEEL-NI-PLATED.

☆ STAR SYMBOL DENOTES CRITICAL DIMENSION, SEE S/C ENGINEERING STANDARD ES-0001.

SIZE	WIDTH	MULT.	LBS. PER M	TEMPER

ISS	SYM	REVISION	BY	DATE
A		REDRAWN ECO 16414	WL	1-22-81

THIS DRAWING DESCRIBES A DESIGN CONSIDERED PROPRIETARY IN NATURE, DEVELOPED AND MANUFACTURED BY SWITCHCRAFT, INC., AND IS RELEASED ON A CONFIDENTIAL BASIS FOR IDENTIFICATION PURPOSE ONLY.

UNLESS OTHERWISE SPECIFIED:
1 - DECIMAL DIMENSIONS ± .005
2 - FRACTIONAL DIMENSIONS ± 1/64
3 - ANGLES ± 1/2°
4 - ALL DIA'S CONCENTRIC WITHIN .005 T.I.R.
5 - ALL DIMENSIONS IN INCHES
6 - FOR THREADS USE UNIFIED PLUG AND RING GAGES ONLY.
7 - REMOVE ALL BURRS.
8 - PART TO BE FABRICATED AS SPECIFIED. MAKE NO DIMENSIONAL ALLOWANCES FOR APPLIED FINISHES, I.E., PLATING, PAINTING, ETC.
9 - HOLES ON SAME CENTERLINE MUST BE ALIGNED WITHIN ± .002

DO NOT SCALE DRAWING

DRAWN BY HCJ	DATE 12-29-75	FINISH
CHECKED BY WH	DATE 12-31-75	PER FINISH SPEC. NO.
APPROVED BY	DATE	MATERIAL
SCALE (2X)		PER MAT. SPEC. NO.
FIRST USED ON		SWITCHCRAFT
NAME SINGLE CONTACT MICROPHONE CONN. FEMALE TYPE	PART NO. 2501 F	ISSUE A
	SHEET OF	

ROUTING 112 116

PAXTON