Excellent Integrated System Limited

Stocking Distributor

Click to view price, real time Inventory, Delivery & Lifecycle Information:

Bel Fuse Inc.
142-4304-401

For any questions, you can email us directly:
sales@integrated-circuit.com

SMA 50 Ohm Reverse Polarity Straight Crimp Type Bulkhead Jack - Captivated Contact

INCHES (MILLIMETERS)
CUSTOMER DRAWINGS AVAILABLE UPON REQUEST

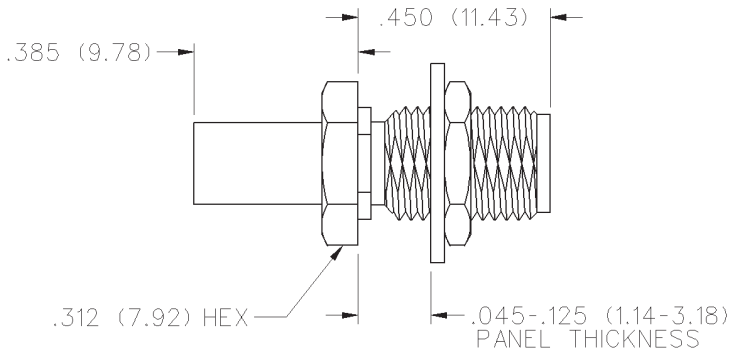

CABLE TYPE	GOLD PLATED	NICKEL PLATED
RG-316 DS, 188DS	142-4304-401	142-4304-406

Mounting hole layout

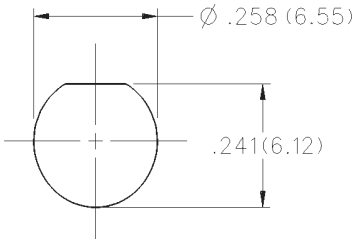

1. Identify connector parts. (3 piece parts - except bulkhead)
2. Strip cable to dimensions shown. Do not nick braid or center conductor. Tin center conductor if contact will be solder attached. Do not tin center conductor if contact is to be crimp attached. When stripping LMR-100 low loss cable, remove foil back to where cable jacket is stripped. A wire stripper of correct size is recommended for this step. Slide heat shrink (as applicable) and crimp sleeve onto jacket of cable.
3. Assemble contact onto cable as shown.
   Solder Attachment: Solder contact to center conductor through solder hole using .020 (0.51) diameter solder. Use a minimum amount of solder for a good joint.
   Crimp Attachment: Crimp contact to center conductor using Johnson Components™ Hand Tool 144-0000-910, setting #2, with positioner 141-0000-907. Crimp location should be centered between end of contact and X-hole. Crimp attachment to solid center conductor cables is not recommended.
4. Flare braid and slide body assembly over contact and under braid. Then seat body assembly firmly onto contact. The cable may have to be held in a clamping fixture. Arrange braid uniformly around crimp stem. Slide crimp sleeve forward and crimp using recommended crimp tool. Slide heat shrink forward and shrink (as applicable).

CABLE GROUP	PART NUMBER	CRIMP HEX
RG-316DS, 188DS	142-4304-401/406	.151 (3.83)

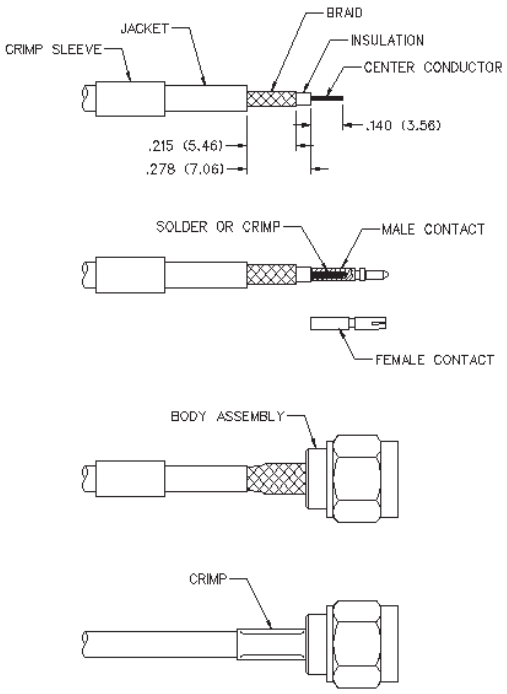

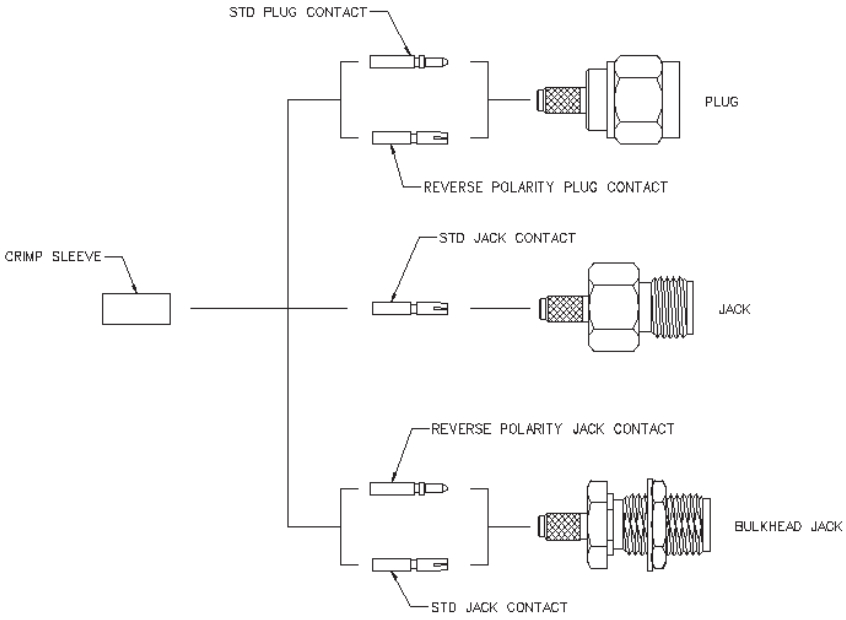

Distributor of Bel Fuse Inc.: Excellent Integrated System Limited
Datasheet of 142-4304-401 - CONN RP-SMA JACK 50 OHM SOLDER
Contact us: sales@integrated-circuit.com Website: www.integrated-circuit.com

SMA Reverse Polarity - 50 Ohm

Specifications

INCHES (MILLIMETERS)
CUSTOMER DRAWINGS AVAILABLE UPON REQUEST

ELECTRICAL RATINGS
Impedance: 50 ohms
Frequency Range:
Flexible cable connectors ..... 0-12.4 GHz
Uncabled receptacles ..... 0-18.0 GHz

VSWR: (f = GHz)	Straight Cabled Connectors	Right Angle Cabled Connectors
RG-316, LMR-100 cable	1.15 + .02f	1.15 + .03f
RG-58, LMR-195 cable	1.17 + .025f	1.17 + .06f
RG-142 cable	1.17 + .02f	1.15 + .03f
LMR-200, LMR-240 cable	1.10 + .03f	1.10 + .06f
Uncabled receptacles		N/A

Working Voltage: (Vrms maximum)†

Connectors for Cable Type	**Sea Level**	**70K Feet**
RG-316; LMR-100, 195, 200	250	65
RG-58, RG-142, LMR-240, uncabled receptacles	335	85

Dielectric Withstanding Voltage: (VRMS minimum at sea level)†
Connectors for RG-316; LMR-100, 195, 200 750
Connectors for RG-58, RG-142, LMR-240, uncabled receptacles . 1000
Corona Level: (Volts minimum at 70,000 feet)=
Connectors for RG-316, LMR-100, 195, 200 190
Connectors for RG-58, RG-142, LMR-240, uncabled receptacles ... 250
Insertion Loss: (dB maximum)
Straight flexible cable connectors ..... $.06\sqrt{f\,(GHz)}$, tested at 6 GHz
Right angle flexible cable connectors ..... $0.15\sqrt{f\,(GHz)}$, tested at 6 GHz
Low loss flexible straight cable connectors ..... $0.06\sqrt{f\,(GHz)}$, tested at 1 GHz
Low loss flexible right angle cable connectors ..... $0.15\sqrt{f\,(GHz)}$, tested at 1 GHz
Uncabled receptacles, field replaceable ..... N/A
Insulation Resistance: 5000 megohms minimum

Contact Resistance: (milliohms maximum)	**Initial**	**After Environmental**
Center contact (straight cabled connectors and uncabled receptacles)	3.0*	4.0*
Center contact (right angle cabled connectors	4.0	6.0
Outer contact (all connectors)	2.0	N/A
Braid to body (gold plated connectors)	0.5	N/A
Braid to body (nickel plated connectors)	5.0	N/A

RF Leakage: (dB minimum, tested at 2.5 GHz)
Flexible cable connectors ..... -60 dB
Uncabled receptacles and adapters ..... N/A

RF High Potential Withstanding Voltage: (Vrms minimum, tested at 4 and 7 MHz)†
Connectors for RG-316; LMR-100, 195, 200 500
Connectors for RG-58, RG-142, LMR-240, uncabled receptacles ... 670

MECHANICAL RATINGS
Engagement Design: MIL-C-39012, Series SMA
Engagement/Disengagement Force: 2 inch-pounds maximum
Mating Torque: 7 to 10 inch-pounds
Bulkhead Mounting Nut Torque: 15 inch-pounds
Coupling Proof Torque: 15 inch-pounds minimum
Coupling Nut Retention: 60 pounds minimum
Contact Retention:
6 lbs. minimum axial force (captivated contacts)
4 inch-ounce minimum torque (uncabled receptacles)

Cable Retention:	**Axial Force* (pounds)**	**Torque (in-oz)**
Connectors for RG-316, LMR-100	20	N/A
Connectors for LMR195, 200	30	N/A
Connectors for RG-58, LMR-240	40	N/A
Connectors for RG-142	45	N/A

*Or cable breaking strength whichever is less.
Durability: 500 cycles minimum
ENVIRONMENTAL RATINGS (Meets or exceed the applicable paragraph of MIL-C-39012)
Temperature Range: - 65°C to + 165°C
Thermal Shock: MIL-STD-202, Method 107, Condition B
Corrosion: MIL-STD-202, Method 101, Condition B
Shock: MIL-STD-202, Method 213, Condition I
Vibration: MIL-STD-202, Method 204, Condition D
Moisture Resistance: MIL-STD-202, Method 106
MATERIAL SPECIFICATIONS
Bodies: Brass per QQ-B-626, gold plated* per MIL-G-45204 .00001" min. or nickel plated per QQ-N-290
Contacts: Male - brass per QQ-B-626, gold plated per MIL-G-45204 .00003" min.
Female - beryllium copper per QQ-C-530, gold plated per MIL-G-45204 .00003" min.
Nut Retention Spring: Beryllium copper per QQ-C-533. Unplated
Insulators: PTFE fluorocarbon per ASTM D 1710 and ASTM D 1457 or Tefzel per ASTM D 3159
Expansion Caps: Brass per QQ-B-613, gold plated per MIL-G-45204 .00001" min. or nickel plated per QQ-N-290
Crimp Sleeves: Copper per WW-T-799 or brass per QQ-B-613, gold plated per MIL-G-45204 .00001" min. or nickel plated per QQ-N-290
Mounting Hardware: Brass per QQ-B-626 or QQ-B-613, gold plated per MIL-G-45204 .00001" min. or nickel plated per QQ-N-290

MATING ENGAGEMENT FOR SMA REVERSE POLARITY SERIES PER FCC RULE 15 NON-STANDARD INTERFACE

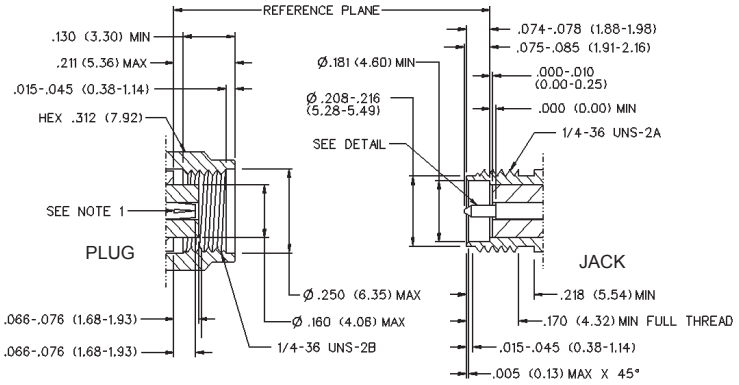

NOTES
1. ID OF CONTACT TO MEET VSWR, CONTACT RESISTANCE AND INSERTION WITHDRAWAL FORCES WHEN MATED WITH DIA .0355-.0370 MALE PIN.

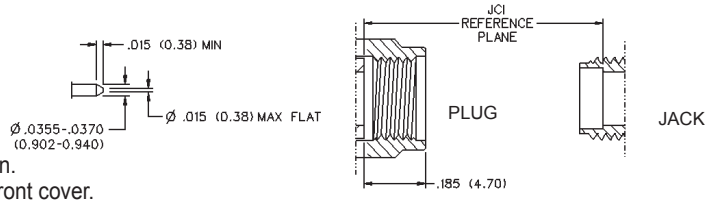

†Avoid user injury due to misapplication.
See safety advisory definitions inside front cover.