Excellent Integrated System Limited

Stocking Distributor

Click to view price, real time Inventory, Delivery & Lifecycle Information:

Panduit
CPM87S-C

For any questions, you can email us directly:
sales@integrated-circuit.com

THIS COPY IS PROVIDED ON A RESTRICTED BASIS AND IS NOT TO BE USED IN ANY WAY DETRIMENTAL TO THE INTERESTS OF PANDUIT CORP.

PANDUIT PART NO.	REF A	REF B	REF C	D	E	F	REF G	REF H	REF J
CPM87S	1.44 (36.6)	0.75 (19.1)	0.76 (19.3)	0.070 (1.78)	0.166 (4.22)	0.20 (5.1)	0.89 (22.6)	0.57 (14.5)	0.19 (4.8)
CPM122S	2.07 (52.6)	1.12 (28.4)	0.82 (20.8)	0.075 (1.91)	0.171 (4.34)	0.22 (5.6)	1.22 (31.0)	0.75 (19.1)	0.20 (5.1)

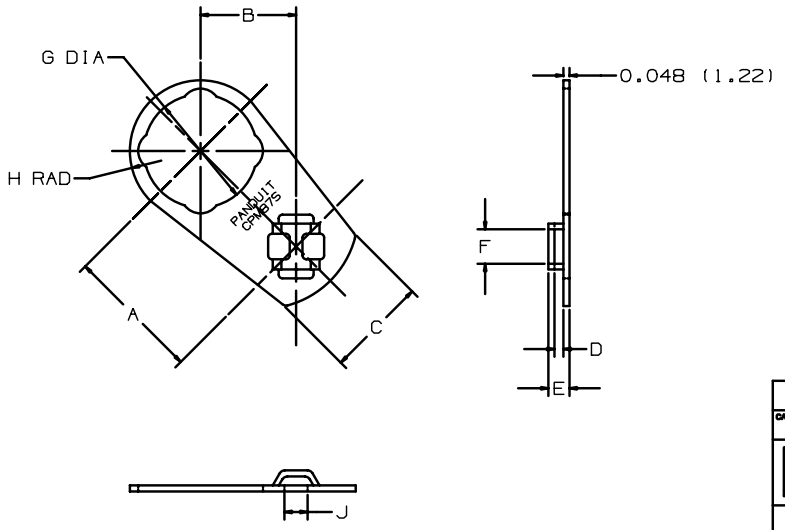

NOTES:

1. SEE CURRENT PRICE SHEET FOR PART NUMBER SUFFIX DESIGNATION FOR PACKAGE SIZE.
2. DESIGNED FOR USE WITH PANDUIT CABLE TIE CROSS-SECTIONS:
   M = MINIATURE, I = INTERMEDIATE,
   S = STANDARD

DIMENSIONS IN BRACKETS ARE METRIC [mm]

CAD FILENAME/LAYERS: G00239HI_PB_CPM_01

PANDUIT CORP. TINLEY PARK, ILLINOIS

CPM-CONTROL PANEL MOUNT

UNLESS OTHERWISE SPECIFIED, DIMENSIONAL TOLERANCES ARE:
(.X) ±0.05 [1.3] (.XXX) ±0.010 [0.25]
(.XX) ±0.02 [0.5] ANGLES ± 5°

UNLESS OTHERWISE SPECIFIED, ALL DIMENSIONS ARE GIVEN IN INCHES, THIRD ANGLE PROJECTION.

REV	DATE	BY	CHK	DESCRIPTION	ECN - R		CUST	SUP
1	4/2/03	LGG		CORRECTED DIM ON TABLE 'D'	GB0239HI	1		
R	8/15/01	LGG		CHANGE DRAWING FROM SS-19348 RV 2	GB0239HI	R		

DRAWN BY LGG
DATE 8/15/01
CHK'D

MAT'L: ZINC PLATED STEEL

SCALE NONE

DRAWING NO. GB0239HI

DWG SIZE A