Excellent Integrated System Limited

Stocking Distributor

Click to view price, real time Inventory, Delivery & Lifecycle Information:

Hammond Manufacturing
1598CBK

For any questions, you can email us directly:
sales@integrated-circuit.com

Bottom View of Assembly

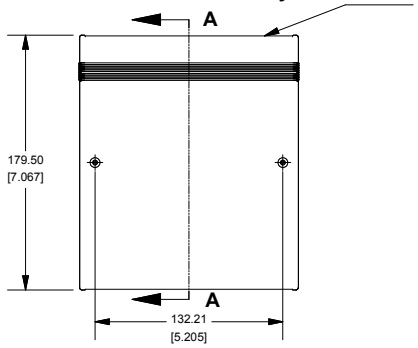

SECTION A-A
(Side View Inside Assembly)

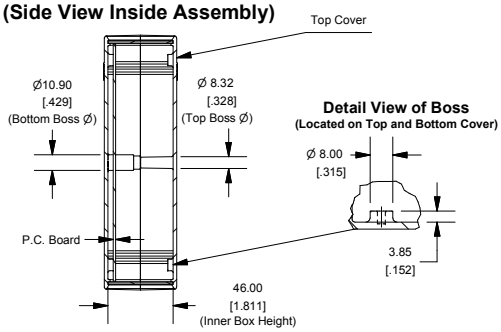

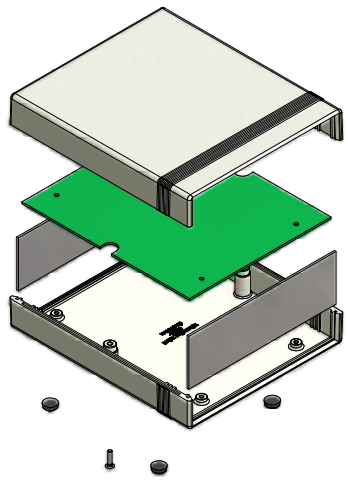

End View of Assembly

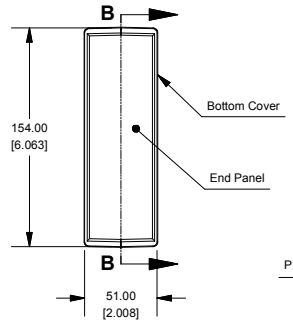

SECTION B-B
(Inside of Bottom Cover)

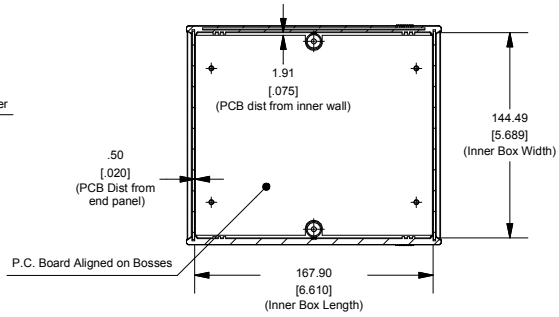

Enclosures can be Factory Modified (Milling, Drilling, Printing etc.)
Solid models of this enclosure available in STEP or IGES.
Contact Factory mjm@hammondmfg.com

NOTE
Purchased Assembly includes top and bottom cover, front and end aluminum panels (alloy 5052-H32, SPV coating on one side), 2 cover screws, and 4 rubber feet.

Front/Rear Panel
(Dashed Line Indicates Viewing Area)

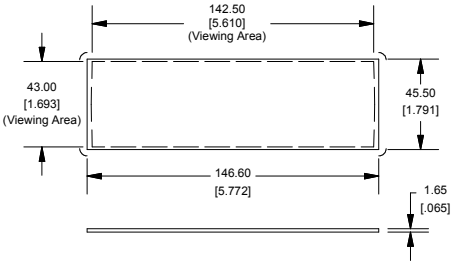

Maximum P.C. Board Size

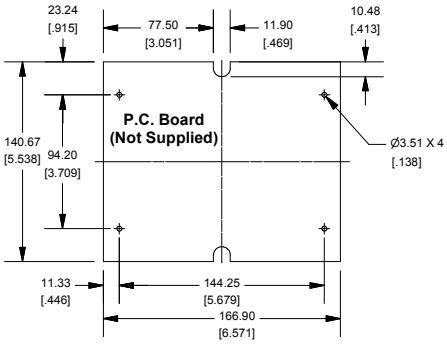

1598C Instrument Case	
FLAME RETARDANT ABS (UL94-VO)	
Black Enclosure with Aluminum Panels	1598CBK
Grey Enclosure with Aluminum Panels	1598CGY
Black EMI/RFI Shielded	1598RCBK
NON-FLAME RETARDANT GPABS (UL94-HB)	
Grey Enclosure with Aluminum Panels	1598CSGY
Grey Enclosure with Black Plastic Panels	1598CSGYPBK
ACCESSORIES	
Black Plastic Panels	1598PLCBK
Rubber Feet (Pkg 24)	1421T2
For 1598 FR-ABS *Cover Screws (Pkg 100) [M3 - 0.5 x 10mm]*	1591MS100
For 1598 GPABS *Cover Screws (Pkg 100) [#4 x 5/8" (15.9mm)]*	1591TS100
For Both Models *PCB Screws (Pkg 100) [#6 x 1/4" (6.4mm)]*	1598ATS100

HAMMOND MANUFACTURING™

1598C

www.hammondmfg.com