Excellent Integrated System Limited

Stocking Distributor

Click to view price, real time Inventory, Delivery & Lifecycle Information:

ON Semiconductor
MC10H174FN

For any questions, you can email us directly:
sales@integrated-circuit.com

Distributor of ON Semiconductor: Excellent Integrated System Limited
Datasheet of MC10H174FN - IC MUX DUAL 4:1 ECL 20-PLCC
Contact us: sales@integrated-circuit.com Website: www.integrated-circuit.com

MC10H174

Dual 4 to 1 Multiplexer

ON Semiconductor®

http://onsemi.com

Description

The MC10H174 is a Dual 4−to−1 Multiplexer. This device is a functional/ pinout duplication of the standard MECL 10K™ part, with 100% improvement in propagation delay and no increase in power supply current.

Features

- Propagation Delay, 1.5 ns Typical
- Power Dissipation, 305 mW Typical
- Improved Noise Margin 150 mV (over operating voltage and temperature range)
- Voltage Compensated
- MECL 10K Compatible
- Pb−Free Packages are Available*

MARKING DIAGRAMS*

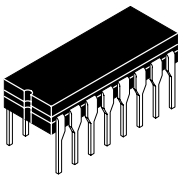

CDIP−16
L SUFFIX
CASE 620A

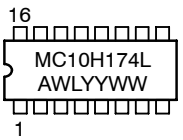

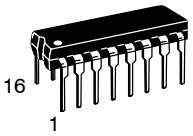

PDIP−16
P SUFFIX
CASE 648

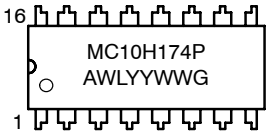

SOEIAJ−16
CASE 966

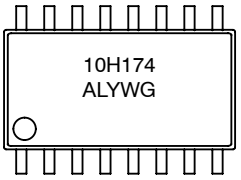

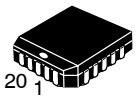

PLLC−20
FN SUFFIX
CASE 775

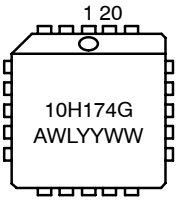

A	= Assembly Location
WL, L	= Wafer Lot
YY, Y	= Year
WW, W	= Work Week
G	= Pb−Free Package

*For additional information on our Pb−Free strategy and soldering details, please download the ON Semiconductor Soldering and Mounting Techniques Reference Manual, SOLDERRM/D.

*For additional marking information, refer to Application Note AND8002/D.

ORDERING INFORMATION

See detailed ordering and shipping information in the package dimensions section on page 3 of this data sheet.

© Semiconductor Components Industries, LLC, 2006

February, 2006 − Rev. 8

Publication Order Number:
MC10H174/D

MC10H174

LOGIC DIAGRAM

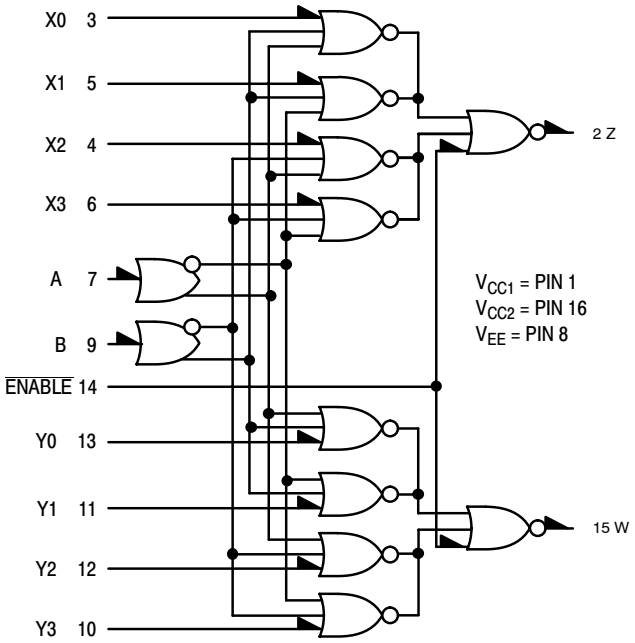

DIP PIN ASSIGNMENT

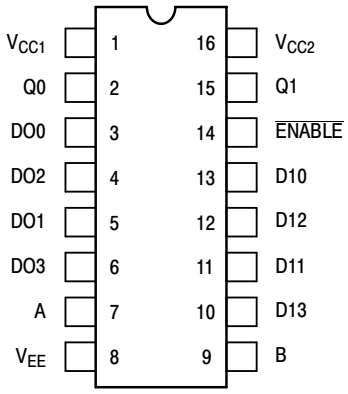

Pin assignment is for Dual−in−Line Package.
For PLCC pin assignment, see the Pin Conversion Tables on page 18 of the ON Semiconductor MECL Data Book (DL122/D).

TRUTH TABLE

ENABLE	ADDRESS INPUTS		OUTPUTS	
$\overline{E}$	B	A	Z	W
H	X	X	L	L
L	L	L	X0	Y0
L	L	H	X1	Y1
L	H	L	X2	Y2
L	H	H	X3	Y3

Table 1. MAXIMUM RATINGS

Symbol	Characteristic	Rating	Unit
V_{EE}	Power Supply (V_{CC} = 0)	−8.0 to 0	Vdc
V_I	Input Voltage (V_{CC} = 0)	0 to V_{EE}	Vdc
I_{out}	Output Current – Continuous – Surge	50 100	mA
T_A	Operating Temperature Range	0 to +75	°C
T_{stg}	Storage Temperature Range – Plastic – Ceramic	−55 to +150 −55 to +165	°C °C

Maximum ratings are those values beyond which device damage can occur. Maximum ratings applied to the device are individual stress limit values (not normal operating conditions) and are not valid simultaneously. If these limits are exceeded, device functional operation is not implied, damage may occur and reliability may be affected.

Table 2. ELECTRICAL CHARACTERISTICS (V_{EE} = −5.2 V ±5%) (Note 1)

Symbol	Characteristic	0°		25°		75°		Unit
		Min	Max	Min	Max	Min	Max	
I_E	Power Supply Current	–	80	–	73	–	80	mA
I_{inH}	Input Current High							μAdc
	Pins 3–7 & 9–13	–	475	–	300	–	300	
	Pin 14	–	670	–	420	–	420	
I_{inL}	Input Current Low	0.5	–	0.5	–	0.3	–	μA
V_{OH}	High Output Voltage	−1.02	−0.84	−0.98	−0.81	−0.92	−0.735	Vdc
V_{OL}	Low Output Voltage	−1.95	−1.63	−1.95	−1.63	−1.95	−1.60	Vdc
V_{IH}	High Input Voltage	−1.17	−0.84	−1.13	−0.81	−1.07	−0.735	Vdc
V_{IL}	Low Input Voltage	−1.95	−1.48	−1.95	−1.48	−1.95	−1.45	Vdc

1. Each MECL 10H™ series circuit has been designed to meet the dc specifications shown in the test table, after thermal equilibrium has been established. The circuit is in a test socket or mounted on a printed circuit board and transverse air flow greater than 500 linear fpm is maintained. Outputs are terminated through a 50 Ω resistor to −2.0 V.

Table 3. AC PARAMETERS

Symbol	Characteristic	0°		25°		75°		Unit
		Min	Max	Min	Max	Min	Max	
t_{pd}	Propagation Delay							ns
	Data	0.7	2.4	0.8	2.5	0.9	2.6	
	Select (A, B)	1.0	2.8	1.1	2.9	1.2	3.2	
	Enable	0.4	1.45	0.4	1.5	0.5	1.7	
t_r	Rise Time	0.5	1.5	0.5	1.6	0.5	1.7	ns
t_f	Fall Time	0.5	1.5	0.5	1.6	0.5	1.7	ns

NOTE: Device will meet the specifications after thermal equilibrium has been established when mounted in a test socket or printed circuit board with maintained transverse airflow greater than 500 lfpm. Electrical parameters are guaranteed only over the declared operating temperature range. Functional operation of the device exceeding these conditions is not implied. Device specification limit values are applied individually under normal operating conditions and not valid simultaneously.

ORDERING INFORMATION

Device	Package	Shipping†
MC10H174FN	PLLC−20	46 Units / Rail
MC10H174FNG	PLLC−20 (Pb−Free)	46 Units / Rail
MC10H174FNR2	PLLC−20	500 / Tape & Reel
MC10H174FNR2G	PLLC−20 (Pb−Free)	500 / Tape & Reel
MC10H174L	CDIP−16	25 Unit / Rail
MC10H174M	SOEIAJ−16	50 Unit / Rail
MC10H174MG	SOEIAJ−16 (Pb−Free)	50 Unit / Rail
MC10H174MEL	SOEIAJ−16	2000 / Tape & Reel
MC10H174MELG	SOEIAJ−16 (Pb−Free)	2000 / Tape & Reel
MC10H174P	PDIP−16	25 Unit / Rail
MC10H174PG	PDIP−16 (Pb−Free)	25 Unit / Rail

†For information on tape and reel specifications, including part orientation and tape sizes, please refer to our Tape and Reel Packaging Specifications Brochure, BRD8011/D.

MC10H174

PACKAGE DIMENSIONS

20 LEAD PLLC
CASE 775–02
ISSUE E

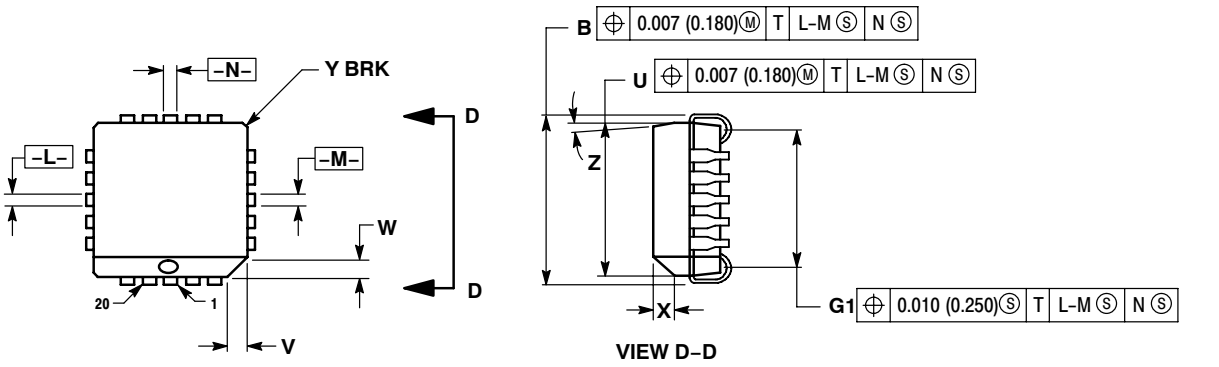

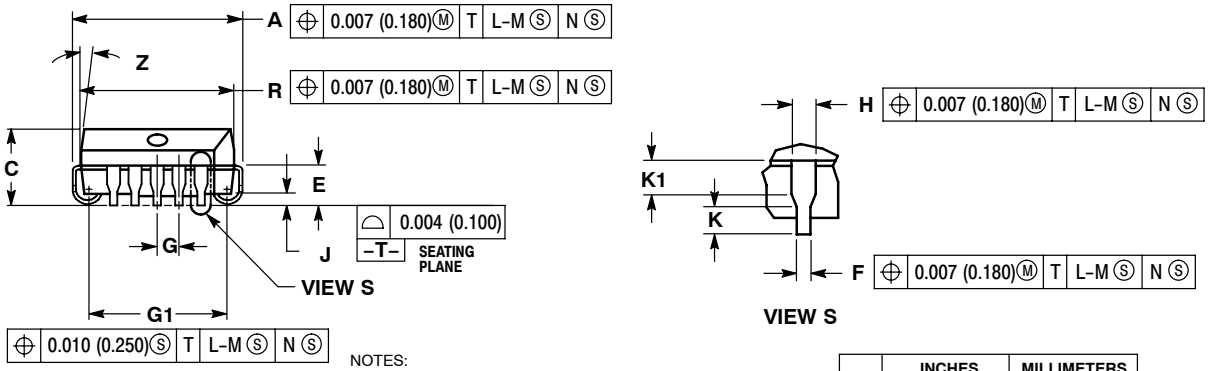

NOTES:
1. DIMENSIONS AND TOLERANCING PER ANSI Y14.5M, 1982.
2. DIMENSIONS IN INCHES.
3. DATUMS –L–, –M–, AND –N– DETERMINED WHERE TOP OF LEAD SHOULDER EXITS PLASTIC BODY AT MOLD PARTING LINE.
4. DIMENSION G1, TRUE POSITION TO BE MEASURED AT DATUM –T–, SEATING PLANE.
5. DIMENSIONS R AND U DO NOT INCLUDE MOLD FLASH. ALLOWABLE MOLD FLASH IS 0.010 (0.250) PER SIDE.
6. DIMENSIONS IN THE PACKAGE TOP MAY BE SMALLER THAN THE PACKAGE BOTTOM BY UP TO 0.012 (0.300). DIMENSIONS R AND U ARE DETERMINED AT THE OUTERMOST EXTREMES OF THE PLASTIC BODY EXCLUSIVE OF MOLD FLASH, TIE BAR BURRS, GATE BURRS AND INTERLEAD FLASH, BUT INCLUDING ANY MISMATCH BETWEEN THE TOP AND BOTTOM OF THE PLASTIC BODY.
7. DIMENSION H DOES NOT INCLUDE DAMBAR PROTRUSION OR INTRUSION. THE DAMBAR PROTRUSION(S) SHALL NOT CAUSE THE H DIMENSION TO BE GREATER THAN 0.037 (0.940). THE DAMBAR INTRUSION(S) SHALL NOT CAUSE THE H DIMENSION TO BE SMALLER THAN 0.025 (0.635).

	INCHES		MILLIMETERS	
DIM	MIN	MAX	MIN	MAX
A	0.385	0.395	9.78	10.03
B	0.385	0.395	9.78	10.03
C	0.165	0.180	4.20	4.57
E	0.090	0.110	2.29	2.79
F	0.013	0.019	0.33	0.48
G	0.050 BSC		1.27 BSC	
H	0.026	0.032	0.66	0.81
J	0.020	---	0.51	---
K	0.025	---	0.64	---
R	0.350	0.356	8.89	9.04
U	0.350	0.356	8.89	9.04
V	0.042	0.048	1.07	1.21
W	0.042	0.048	1.07	1.21
X	0.042	0.056	1.07	1.42
Y	---	0.020	---	0.50
Z	2 °	10 °	2 °	10 °
G1	0.310	0.330	7.88	8.38
K1	0.040	---	1.02	---

MC10H174

PACKAGE DIMENSIONS

SOEIAJ–16
CASE 966–01
ISSUE A

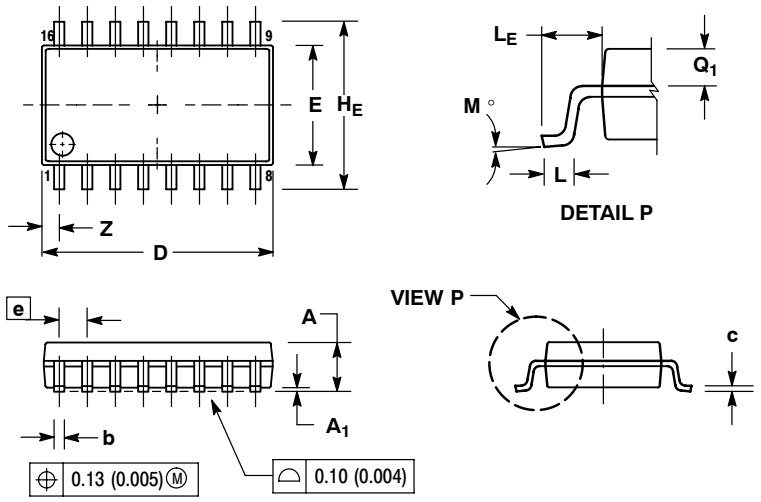

NOTES:
1. DIMENSIONING AND TOLERANCING PER ANSI Y14.5M, 1982.
2. CONTROLLING DIMENSION: MILLIMETER.
3. DIMENSIONS D AND E DO NOT INCLUDE MOLD FLASH OR PROTRUSIONS AND ARE MEASURED AT THE PARTING LINE. MOLD FLASH OR PROTRUSIONS SHALL NOT EXCEED 0.15 (0.006) PER SIDE.
4. TERMINAL NUMBERS ARE SHOWN FOR REFERENCE ONLY.
5. THE LEAD WIDTH DIMENSION (b) DOES NOT INCLUDE DAMBAR PROTRUSION. ALLOWABLE DAMBAR PROTRUSION SHALL BE 0.08 (0.003) TOTAL IN EXCESS OF THE LEAD WIDTH DIMENSION AT MAXIMUM MATERIAL CONDITION. DAMBAR CANNOT BE LOCATED ON THE LOWER RADIUS OR THE FOOT. MINIMUM SPACE BETWEEN PROTRUSIONS AND ADJACENT LEAD TO BE 0.46 (0.018).

	MILLIMETERS		INCHES	
DIM	MIN	MAX	MIN	MAX
A	---	2.05	---	0.081
A_1	0.05	0.20	0.002	0.008
b	0.35	0.50	0.014	0.020
c	0.10	0.20	0.007	0.011
D	9.90	10.50	0.390	0.413
E	5.10	5.45	0.201	0.215
e	1.27 BSC		0.050 BSC	
H_E	7.40	8.20	0.291	0.323
L	0.50	0.85	0.020	0.033
L_E	1.10	1.50	0.043	0.059
M	0 °	10 °	0 °	10 °
Q_1	0.70	0.90	0.028	0.035
Z	---	0.78	---	0.031

CDIP–16
L SUFFIX
CERAMIC DIP PACKAGE
CASE 620A–01
ISSUE O

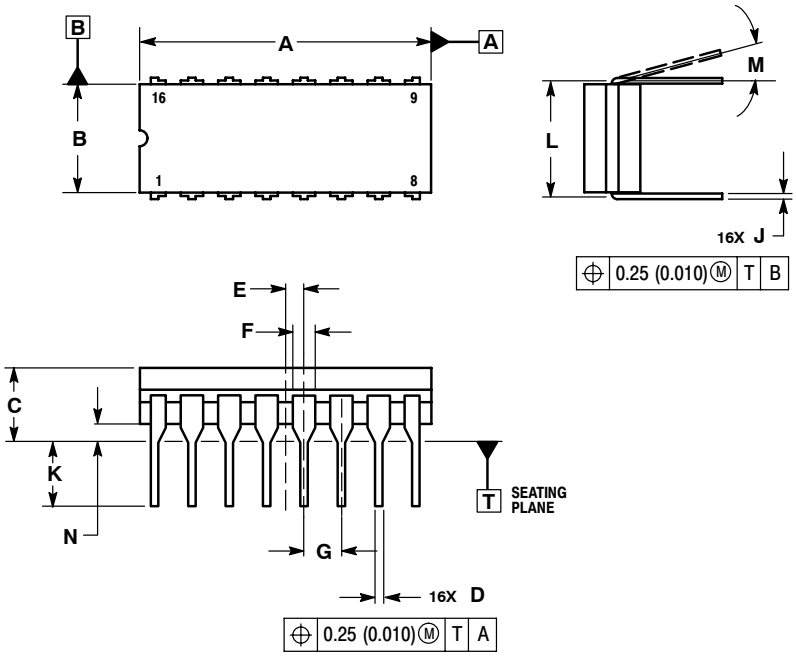

NOTES:
1. DIMENSIONING AND TOLERANCING PER ASME Y14.5M, 1994.
2. CONTROLLING DIMENSION: INCH.
3. DIMENSION L TO CENTER OF LEAD WHEN FORMED PARALLEL.
4. DIMENSION F MAY NARROW TO 0.76 (0.030) WHERE THE LEAD ENTERS THE CERAMIC BODY.
5 THIS DRAWING REPLACES OBSOLETE CASE OUTLINE 620–10.

	INCHES		MILLIMETERS	
DIM	MIN	MAX	MIN	MAX
A	0.750	0.785	19.05	19.93
B	0.240	0.295	6.10	7.49
C	---	0.200	---	5.08
D	0.015	0.020	0.39	0.50
E	0.050 BSC		1.27 BSC	
F	0.055	0.065	1.40	1.65
G	0.100 BSC		2.54 BSC	
H	0.008	0.015	0.21	0.38
K	0.125	0.170	3.18	4.31
L	0.300 BSC		7.62 BSC	
M	0 °	15 °	0 °	15 °
N	0.020	0.040	0.51	1.01

Distributor of ON Semiconductor: Excellent Integrated System Limited
Datasheet of MC10H174FN - IC MUX DUAL 4:1 ECL 20-PLCC
Contact us: sales@integrated-circuit.com Website: www.integrated-circuit.com

MC10H174

PACKAGE DIMENSIONS

PDIP–16
P SUFFIX
PLASTIC DIP PACKAGE
CASE 648–08
ISSUE R

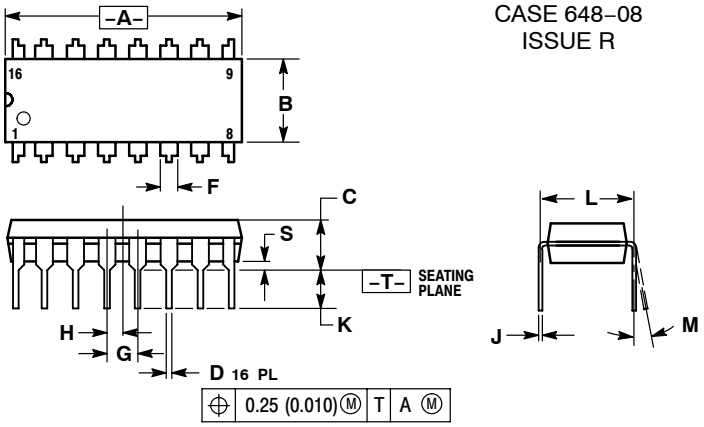

NOTES:
1. DIMENSIONING AND TOLERANCING PER ANSI Y14.5M, 1982.
2. CONTROLLING DIMENSION: INCH.
3. DIMENSION L TO CENTER OF LEADS WHEN FORMED PARALLEL.
4. DIMENSION B DOES NOT INCLUDE MOLD FLASH.
5. ROUNDED CORNERS OPTIONAL.

	INCHES		MILLIMETERS	
DIM	MIN	MAX	MIN	MAX
A	0.740	0.770	18.80	19.55
B	0.250	0.270	6.35	6.85
C	0.145	0.175	3.69	4.44
D	0.015	0.021	0.39	0.53
F	0.040	0.70	1.02	1.77
G	0.100 BSC		2.54 BSC	
H	0.050 BSC		1.27 BSC	
J	0.008	0.015	0.21	0.38
K	0.110	0.130	2.80	3.30
L	0.295	0.305	7.50	7.74
M	0°	10°	0°	10°
S	0.020	0.040	0.51	1.01

MECL 10H and MECL 10K are trademarks of Motorola, Inc.

ON Semiconductor and are registered trademarks of Semiconductor Components Industries, LLC (SCILLC). SCILLC reserves the right to make changes without further notice to any products herein. SCILLC makes no warranty, representation or guarantee regarding the suitability of its products for any particular purpose, nor does SCILLC assume any liability arising out of the application or use of any product or circuit, and specifically disclaims any and all liability, including without limitation special, consequential or incidental damages. "Typical" parameters which may be provided in SCILLC data sheets and/or specifications can and do vary in different applications and actual performance may vary over time. All operating parameters, including "Typicals" must be validated for each customer application by customer's technical experts. SCILLC does not convey any license under its patent rights nor the rights of others. SCILLC products are not designed, intended, or authorized for use as components in systems intended for surgical implant into the body, or other applications intended to support or sustain life, or for any other application in which the failure of the SCILLC product could create a situation where personal injury or death may occur. Should Buyer purchase or use SCILLC products for any such unintended or unauthorized application, Buyer shall indemnify and hold SCILLC and its officers, employees, subsidiaries, affiliates, and distributors harmless against all claims, costs, damages, and expenses, and reasonable attorney fees arising out of, directly or indirectly, any claim of personal injury or death associated with such unintended or unauthorized use, even if such claim alleges that SCILLC was negligent regarding the design or manufacture of the part. SCILLC is an Equal Opportunity/Affirmative Action Employer. This literature is subject to all applicable copyright laws and is not for resale in any manner.

PUBLICATION ORDERING INFORMATION

LITERATURE FULFILLMENT:
Literature Distribution Center for ON Semiconductor
P.O. Box 61312, Phoenix, Arizona 85082–1312 USA
Phone: 480–829–7710 or 800–344–3860 Toll Free USA/Canada
Fax: 480–829–7709 or 800–344–3867 Toll Free USA/Canada
Email: orderlit@onsemi.com

N. American Technical Support: 800–282–9855 Toll Free USA/Canada

Japan: ON Semiconductor, Japan Customer Focus Center
2–9–1 Kamimeguro, Meguro–ku, Tokyo, Japan 153–0051
Phone: 81–3–5773–3850

ON Semiconductor Website: http://onsemi.com

Order Literature: http://www.onsemi.com/litorder

For additional information, please contact your local Sales Representative.