Excellent Integrated System Limited

Stocking Distributor

Click to view price, real time Inventory, Delivery & Lifecycle Information:

ON Semiconductor
MC14555BCP

For any questions, you can email us directly:
sales@integrated-circuit.com

MC14555B, MC14556B

Dual Binary to 1-of-4 Decoder/Demultiplexer

The MC14555B and MC14556B are constructed with complementary MOS (CMOS) enhancement mode devices. Each Decoder/Demultiplexer has two select inputs (A and B), an active low Enable input (E), and four mutually exclusive outputs (Q0, Q1, Q2, Q3). The MC14555B has the selected output go to the "high" state, and the MC14556B has the selected output go to the "low" state. Expanded decoding such as binary−to−hexadecimal (1−of−16), etc., can be achieved by using other MC14555B or MC14556B devices.

Applications include code conversion, address decoding, memory selection control, and demultiplexing (using the Enable input as a data input) in digital data transmission systems.

Features

- Diode Protection on All Inputs
- Active High or Active Low Outputs
- Expandable
- Supply Voltage Range = 3.0 Vdc to 18 Vdc
- All Outputs Buffered
- Capable of Driving Two Low−Power TTL Loads or One Low−Power Schottky TTL Load Over the Rated Temperature Range
- NLV Prefix for Automotive and Other Applications Requiring Unique Site and Control Change Requirements; AEC−Q100 Qualified and PPAP Capable
- These Devices are Pb−Free and are RoHS Compliant

MAXIMUM RATINGS (Voltages Referenced to V_{SS})

Parameter	Symbol	Value	Unit
DC Supply Voltage Range	V_{DD}	−0.5 to +18.0	V
Input or Output Voltage Range (DC or Transient)	V_{in}, V_{out}	−0.5 to V_{DD} + 0.5	V
Input or Output Current (DC or Transient) per Pin	I_{in}, I_{out}	±10	mA
Power Dissipation, per Package (Note 1)	P_D	500	mW
Ambient Temperature Range	T_A	−55 to +125	°C
Storage Temperature Range	T_{stg}	−65 to +150	°C
Lead Temperature (8−Second Soldering)	T_L	260	°C

Stresses exceeding those listed in the Maximum Ratings table may damage the device. If any of these limits are exceeded, device functionality should not be assumed, damage may occur and reliability may be affected.

1. Temperature Derating: "D/DW" Packages: –7.0 mW/°C From 65°C To 125°C

This device contains protection circuitry to guard against damage due to high static voltages or electric fields. However, precautions must be taken to avoid applications of any voltage higher than maximum rated voltages to this high−impedance circuit. For proper operation, V_{in} and V_{out} should be constrained to the range $V_{SS} \le (V_{in}$ or $V_{out}) \le V_{DD}$.

Unused inputs must always be tied to an appropriate logic voltage level (e.g., either V_{SS} or V_{DD}). Unused outputs must be left open.

ON Semiconductor®

http://onsemi.com

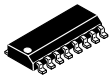

1

SOIC−16
D SUFFIX
CASE 751B

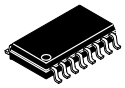

1

SOEIAJ−16
F SUFFIX
CASE 966

PIN ASSIGNMENTS

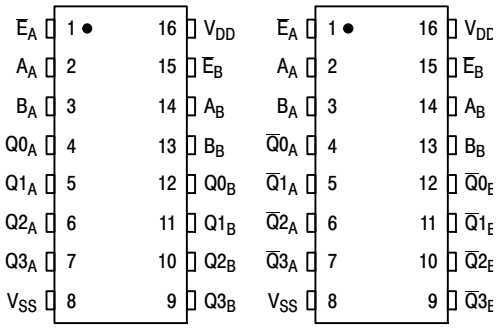

MARKING DIAGRAMS

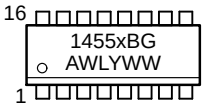

SOIC−16

SOEIAJ−16

x = 5 or 6
A = Assembly Location
WL, L = Wafer Lot
YY, Y = Year
WW, W = Work Week
G = Pb−Free Package

ORDERING INFORMATION

See detailed ordering and shipping information in the package dimensions section on page 4 of this data sheet.

MC14555B, MC14556B

TRUTH TABLE

Inputs			Outputs							
Enable	Select		MC14555B				MC14556B			
$\overline{E}$	B	A	Q3	Q2	Q1	Q0	$\overline{Q3}$	$\overline{Q2}$	$\overline{Q1}$	$\overline{Q0}$
0	0	0	0	0	0	1	1	1	1	0
0	0	1	0	0	1	0	1	1	0	1
0	1	0	0	1	0	0	1	0	1	1
0	1	1	1	0	0	0	0	1	1	1
1	X	X	0	0	0	0	1	1	1	1

X = Don't Care

BLOCK DIAGRAM

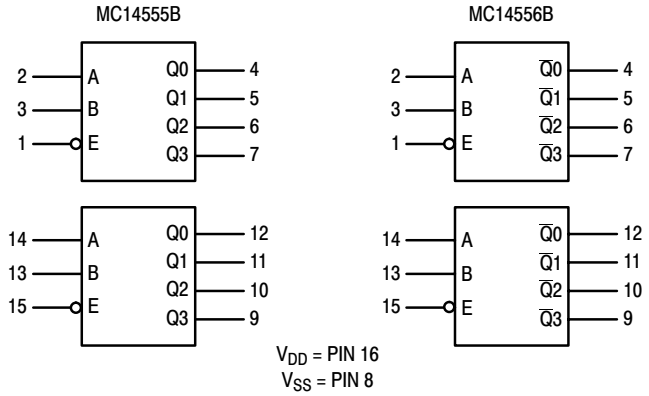

ELECTRICAL CHARACTERISTICS (Voltages Referenced to V_{SS})

Characteristic	Symbol	V_{DD} Vdc	−55°C Min	−55°C Max	25°C Min	25°C Typ (Note 2)	25°C Max	125°C Min	125°C Max	Unit
Output Voltage "0" Level V_{in} = V_{DD} or 0	V_{OL}	5.0	–	0.05	–	0	0.05	–	0.05	Vdc
		10	–	0.05	–	0	0.05	–	0.05	
		15	–	0.05	–	0	0.05	–	0.05	
"1" Level V_{in} = 0 or V_{DD}	V_{OH}	5.0	4.95	–	4.95	5.0	–	4.95	–	Vdc
		10	9.95	–	9.95	10	–	9.95	–	
		15	14.95	–	14.95	15	–	14.95	–	
Input Voltage "0" Level	V_{IL}									Vdc
(V_O = 4.5 or 0.5 Vdc)		5.0	–	1.5	–	2.25	1.5	–	1.5	
(V_O = 9.0 or 1.0 Vdc)		10	–	3.0	–	4.50	3.0	–	3.0	
(V_O = 13.5 or 1.5 Vdc)		15	–	4.0	–	6.75	4.0	–	4.0	
"1" Level	V_{IH}									Vdc
(V_O = 0.5 or 4.5 Vdc)		5.0	3.5	–	3.5	2.75	–	3.5	–	
(V_O = 1.0 or 9.0 Vdc)		10	7.0	–	7.0	5.50	–	7.0	–	
(V_O = 1.5 or 13.5 Vdc)		15	11	–	11	8.25	–	11	–	
Output Drive Current	I_{OH}									mAdc
(V_{OH} = 2.5 Vdc) Source		5.0	–3.0	–	–2.4	–4.2	–	–1.7	–	
(V_{OH} = 4.6 Vdc)		5.0	–0.64	–	–0.51	–0.88	–	–0.36	–	
(V_{OH} = 9.5 Vdc)		10	–1.6	–	–1.3	–2.25	–	–0.9	–	
(V_{OH} = 13.5 Vdc)		15	–4.2	–	–3.4	–8.8	–	–2.4	–	
(V_{OL} = 0.4 Vdc) Sink	I_{OL}	5.0	0.64	–	0.51	0.88	–	0.36	–	mAdc
(V_{OL} = 0.5 Vdc)		10	1.6	–	1.3	2.25	–	0.9	–	
(V_{OL} = 1.5 Vdc)		15	4.2	–	3.4	8.8	–	2.4	–	
Input Current	I_{in}	15	–	±0.1	–	±0.00001	±0.1	–	±1.0	μAdc
Input Capacitance, (V_{in} = 0)	C_{in}	–	–	–	–	5.0	7.5	–	–	pF
Quiescent Current (Per Package)	I_{DD}	5.0	–	5.0	–	0.005	5.0	–	150	μAdc
		10	–	10	–	0.010	10	–	300	
		15	–	20	–	0.015	20	–	600	
Total Supply Current (Notes 3, 4) (Dynamic plus Quiescent, Per Package) (C_L = 50 pF on all outputs, all buffers switching)	I_T	5.0	I_T = (0.85 μA/kHz) f + I_{DD}							μAdc
		10	I_T = (1.70 μA/kHz) f + I_{DD}							
		15	I_T = (2.60 μA/kHz) f + I_{DD}							

Product parametric performance is indicated in the Electrical Characteristics for the listed test conditions, unless otherwise noted. Product performance may not be indicated by the Electrical Characteristics if operated under different conditions.

2. Data labelled "Typ" is not to be used for design purposes but is intended as an indication of the IC's potential performance.
3. The formulas given are for the typical characteristics only at 25°C.
4. To calculate total supply current at loads other than 50 pF: $I_T(C_L) = I_T(50\ pF) + (C_L - 50)\ Vfk$ where: I_T is in μA (per package), C_L in pF, $V = (V_{DD} - V_{SS})$ in volts, f in kHz is input frequency, and k = 0.002.

SWITCHING CHARACTERISTICS (Note 5) (C_L = 50 pF, T_A = 25°C)

Characteristic	Symbol	V_{DD}	Min	Typ (Note 6)	Max	Unit
Output Rise and Fall Time t_{TLH}, t_{THL} = (1.5 ns/pF) C_L + 25 ns t_{TLH}, t_{THL} = (0.75 ns/pF) C_L + 12.5 ns t_{TLH}, t_{THL} = (0.55 ns/pF) C_L + 9.5 ns	t_{TLH}, t_{THL}	 5.0 10 15	 – – –	 100 50 40	 200 100 80	ns
Propagation Delay Time − A, B to Output t_{PLH}, t_{PHL} = (1.7 ns/pF) C_L + 135 ns t_{PLH}, t_{PHL} = (0.66 ns/pF) C_L + 62 ns t_{PLH}, t_{PHL} = (0.5 ns/pF) C_L + 45 ns	t_{PLH}, t_{PHL}	 5.0 10 15	 – – –	 220 95 70	 440 190 140	ns
Propagation Delay Time − E to Output t_{PLH}, t_{PHL} = (1.7 ns/pF) C_L + 115 ns t_{PLH}, t_{PHL} = (0.66 ns/pF) C_L + 52 ns t_{PLH}, t_{PHL} = (0.5 ns/pF) C_L + 40 ns	t_{PLH}, t_{PHL}	 5.0 10 15	 – – –	 200 85 65	 400 170 130	ns

5. The formulas given are for the typical characteristics only at 25°C.
6. Data labelled "Typ" is not to be used for design purposes but is intended as an indication of the IC's potential performance.

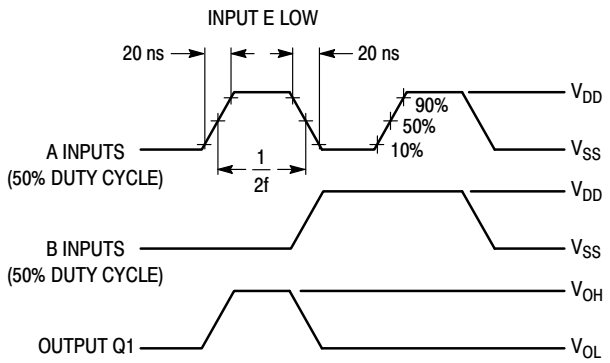

All 8 outputs connect to respective C_L loads.
f in respect to a system clock.

Figure 1. Dynamic Power Dissipation Signal Waveforms

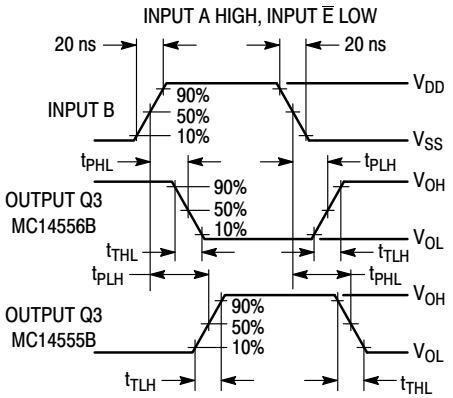

Figure 2. Dynamic Signal Waveforms

LOGIC DIAGRAM
(1/2 of Dual)

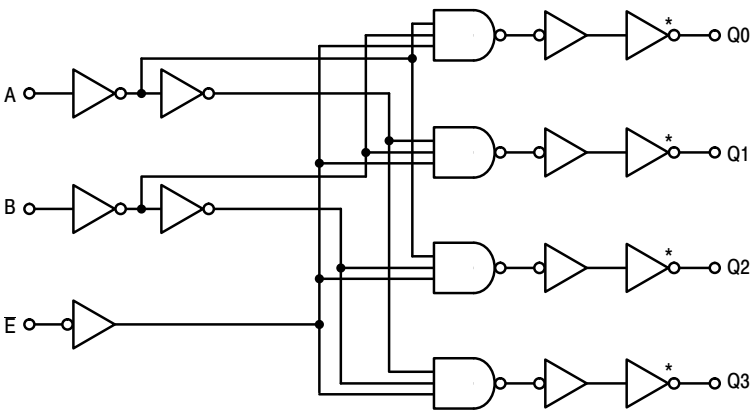

*Eliminated for MC14555B

ORDERING INFORMATION

Device	Package	Shipping†
MC14555BDG	SOIC−16 (Pb−Free)	48 Units / Rail
MC14555BDR2G	SOIC−16 (Pb−Free)	2500 / Tape & Reel
NLV14555BDR2G*	SOIC−16 (Pb−Free)	2500 / Tape & Reel
MC14555BFELG	SOEIAJ−16 (Pb−Free)	2000 / Tape & Reel
MC14556BDR2G	SOIC−16 (Pb−Free)	2500 / Tape & Reel
NLV14556BDR2G*	SOIC−16 (Pb−Free)	2500 / Tape & Reel

†For information on tape and reel specifications, including part orientation and tape sizes, please refer to our Tape and Reel Packaging Specifications Brochure, BRD8011/D.
*NLV Prefix for Automotive and Other Applications Requiring Unique Site and Control Change Requirements; AEC−Q100 Qualified and PPAP Capable.

MC14555B, MC14556B

PACKAGE DIMENSIONS

SOIC−16
CASE 751B−05
ISSUE K

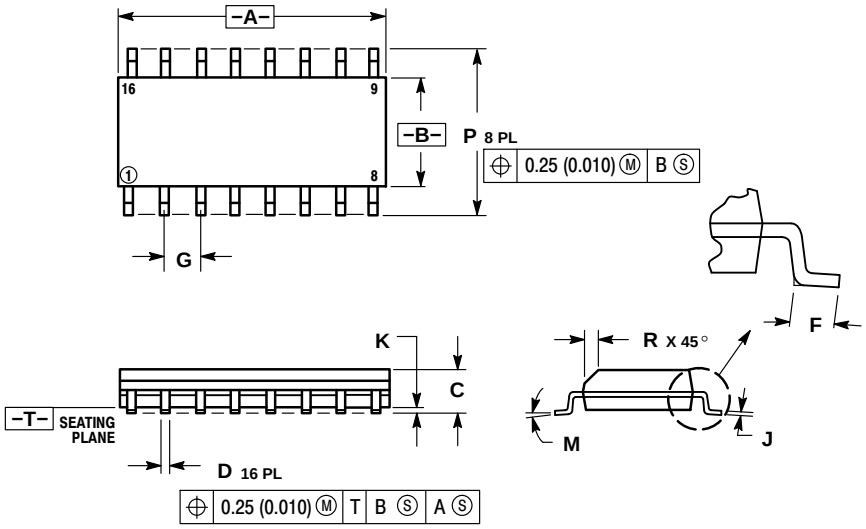

NOTES:
1. DIMENSIONING AND TOLERANCING PER ANSI Y14.5M, 1982.
2. CONTROLLING DIMENSION: MILLIMETER.
3. DIMENSIONS A AND B DO NOT INCLUDE MOLD PROTRUSION.
4. MAXIMUM MOLD PROTRUSION 0.15 (0.006) PER SIDE.
5. DIMENSION D DOES NOT INCLUDE DAMBAR PROTRUSION. ALLOWABLE DAMBAR PROTRUSION SHALL BE 0.127 (0.005) TOTAL IN EXCESS OF THE D DIMENSION AT MAXIMUM MATERIAL CONDITION.

	MILLIMETERS		INCHES	
DIM	MIN	MAX	MIN	MAX
A	9.80	10.00	0.386	0.393
B	3.80	4.00	0.150	0.157
C	1.35	1.75	0.054	0.068
D	0.35	0.49	0.014	0.019
F	0.40	1.25	0.016	0.049
G	1.27 BSC		0.050 BSC	
J	0.19	0.25	0.008	0.009
K	0.10	0.25	0.004	0.009
M	0°	7°	0°	7°
P	5.80	6.20	0.229	0.244
R	0.25	0.50	0.010	0.019

SOLDERING FOOTPRINT

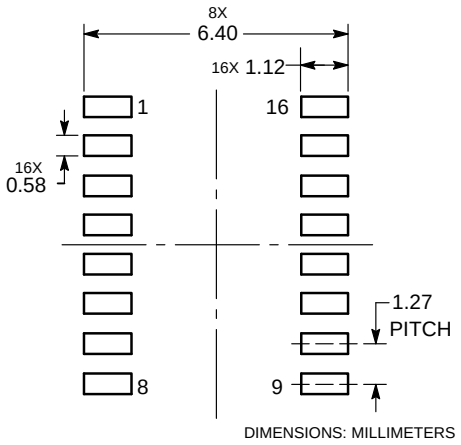

MC14555B, MC14556B

PACKAGE DIMENSIONS

SOEIAJ−16
CASE 966
ISSUE A

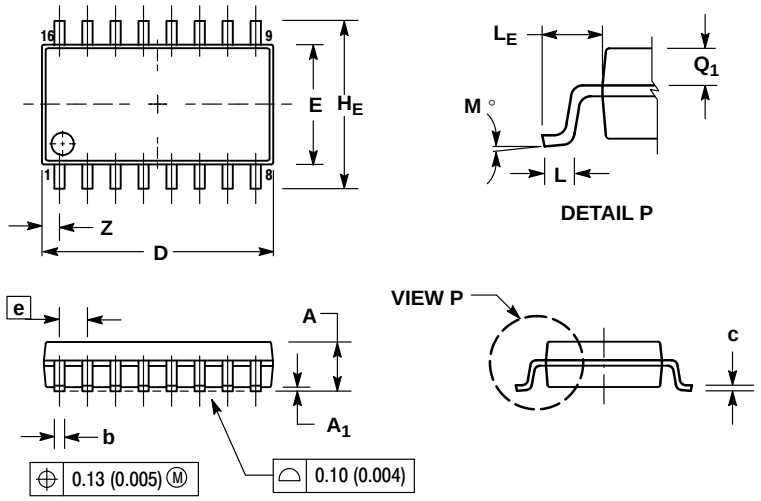

NOTES:
1. DIMENSIONING AND TOLERANCING PER ANSI Y14.5M, 1982.
2. CONTROLLING DIMENSION: MILLIMETER.
3. DIMENSIONS D AND E DO NOT INCLUDE MOLD FLASH OR PROTRUSIONS AND ARE MEASURED AT THE PARTING LINE. MOLD FLASH OR PROTRUSIONS SHALL NOT EXCEED 0.15 (0.006) PER SIDE.
4. TERMINAL NUMBERS ARE SHOWN FOR REFERENCE ONLY.
5. THE LEAD WIDTH DIMENSION (b) DOES NOT INCLUDE DAMBAR PROTRUSION. ALLOWABLE DAMBAR PROTRUSION SHALL BE 0.08 (0.003) TOTAL IN EXCESS OF THE LEAD WIDTH DIMENSION AT MAXIMUM MATERIAL CONDITION. DAMBAR CANNOT BE LOCATED ON THE LOWER RADIUS OR THE FOOT. MINIMUM SPACE BETWEEN PROTRUSIONS AND ADJACENT LEAD TO BE 0.46 (0.018).

	MILLIMETERS		INCHES	
DIM	MIN	MAX	MIN	MAX
A	---	2.05	---	0.081
A_1	0.05	0.20	0.002	0.008
b	0.35	0.50	0.014	0.020
c	0.10	0.20	0.007	0.011
D	9.90	10.50	0.390	0.413
E	5.10	5.45	0.201	0.215
e	1.27 BSC		0.050 BSC	
H_E	7.40	8.20	0.291	0.323
L	0.50	0.85	0.020	0.033
L_E	1.10	1.50	0.043	0.059
M	0 °	10 °	0 °	10 °
Q_1	0.70	0.90	0.028	0.035
Z	---	0.78	---	0.031

PUBLICATION ORDERING INFORMATION

LITERATURE FULFILLMENT:
Literature Distribution Center for ON Semiconductor
P.O. Box 5163, Denver, Colorado 80217 USA
Phone: 303−675−2175 or 800−344−3860 Toll Free USA/Canada
Fax: 303−675−2176 or 800−344−3867 Toll Free USA/Canada
Email: orderlit@onsemi.com

N. American Technical Support: 800−282−9855 Toll Free USA/Canada
Europe, Middle East and Africa Technical Support:
Phone: 421 33 790 2910
Japan Customer Focus Center
Phone: 81−3−5817−1050

ON Semiconductor Website: **www.onsemi.com**

Order Literature: http://www.onsemi.com/orderlit

For additional information, please contact your local Sales Representative