Excellent Integrated System Limited

Stocking Distributor

Click to view price, real time Inventory, Delivery & Lifecycle Information:

International Rectifier (Infineon Technologies Americas Corp.)
IPS7091GTRPBF

For any questions, you can email us directly:
sales@integrated-circuit.com

Distributor of International Rectifier (Infineon Technologies Americas Corp.): Excellent In
Datasheet of IPS7091GTRPBF - IC SWITCH IPS HIGH SIDE 8-SOIC
Contact us: sales@integrated-circuit.com Website: www.integrated-circuit.com

International
IOR Rectifier

Data sheet N° 60291_C

IPS7091(G)(S)PbF

INTELLIGENT POWER HIGH SIDE SWITCH

Features

- Over temperature shutdown (with auto-restart)
- Short circuit protection (current limit)
- Active clamp
- Open load detection
- Logic ground isolated from power ground
- ESD protection
- Ground loss protection
- Status feedback

Product Summary

Rds(on)	120mΩ max.
Vclamp	70V
I Limit	5A (typ.)
Open load	3V

Description

The IPS7091(G)(S)PbF is a five terminal Intelligent Power Switch (IPS) with built in short circuit, over-temperature, ESD protection, inductive load capability and diagnostic feedback. The output current is limited at Ilim value. Current limitation is activated until the thermal protection acts. The over-temperature protection turns off the device if the junction temperature exceeds Tshutdown. It will automatically restart after the junction has cooled 7°C below Tshutdown. A diagnostic pin is provided for status feedback of short circuit, over-temperature and open load detection. The double level shifter circuitry allows large offsets between the logic ground and the load.

Package

TO220	D2-Pak	SO-8
IPS7091PbF	IPS7091SPbF	IPS7091GPbF

Typical Connection

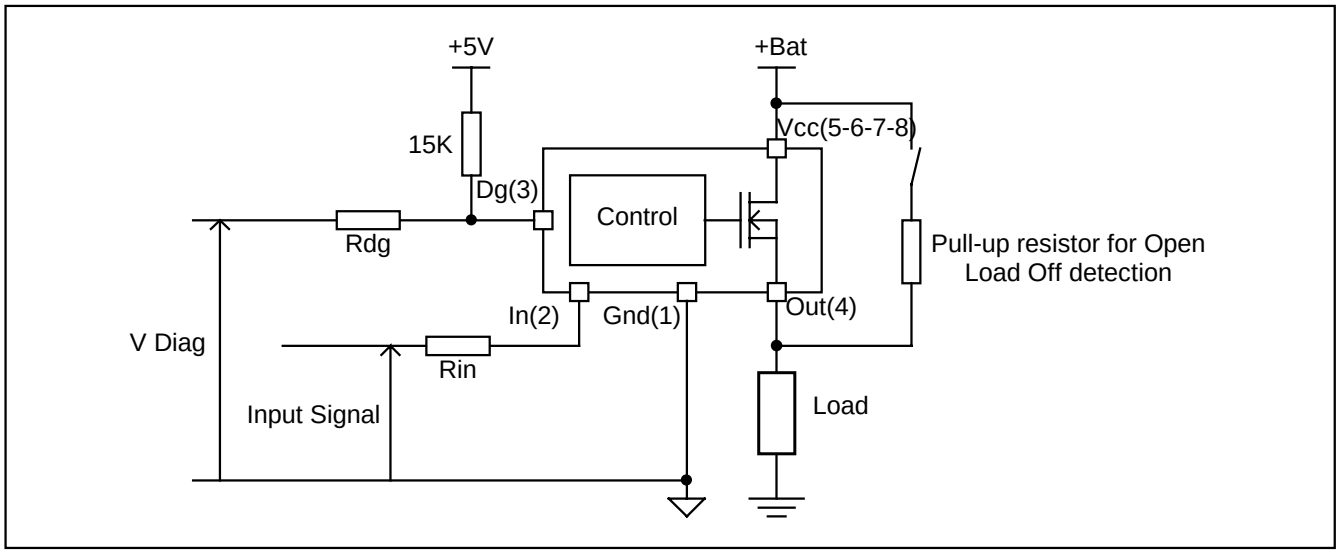

Absolute Maximum Ratings

Absolute maximum ratings indicate sustained limits beyond which damage to the device may occur. All voltage parameters are referenced to Ground lead. (Tambient=25°C unless otherwise specified).

Symbol	Parameter	Min.	Max.	Units
Vout	Maximum output voltage	Vcc-65	Vcc+0.3	V
Voffset	Maximum logic ground to load ground offset	Vcc-65	Vcc+0.3	
Vin	Maximum input voltage	-0.3	5.5	
Vcc max.	Maximum Vcc voltage	—	65	
Vcc cont.	Maximum continuous Vcc voltage	—	35	
Iin max.	Maximum IN current	-1	10	mA
Idg max.	Maximum diagnostic output current	-1	10	
Vdg	Maximum diagnostic output voltage	-0.3	5.5	V
Pd	Maximum power dissipation (internally limited by thermal protection) Rth=100°C/W	—	1.25	W
Isd cont.	Maximum continuous diode current (Rth=100°C/W)	—	1.8	A
ESD1	Electrostatic discharge voltage (Human body) 100pF, 1500Ω	—	4	kV
ESD2	Electrostatic discharge voltage (Machine Model) C=200pF,R=0Ω,L=10µH	—	0.5	
Tj max.	Max. storage & operating temperature junction temperature	-40	+150	°C

Thermal Characteristics

Symbol	Parameter	Typ.	Max.	Units
Rth1	Thermal resistance junction to ambient SO8 std. footprint	100	—	°C/W
Rth1	Thermal resistance junction to ambient TO220 free air	60	—	
Rth1	Thermal resistance junction to ambient D2Pak std. footprint	60	—	
Rth2	Thermal resistance junction to ambient D2Pak 1” sqrt. footprint	40	—	
Rth3	Thermal resistance junction to case D2pak/TO220	4	—	

Recommended Operating Conditions

These values are given for a quick design. For operation outside these conditions, please consult the application notes.

Symbol	Parameter	Min.	Max.	Units
VIH	High level input voltage	4	5.5	
VIL	Low level input voltage	-0.3	0.9	
Iout	Continuous drain current, Tamb=85°C, Tj=125°C, Vin=5V, Rth=100°C/W	—	1.5	A
Rin	Recommended resistor in series with IN pin	10	20	kΩ
Rdgs	Recommended resistor in series with DG pin	10	20	
Rol	Recommended pull-up resistor for open load detection	5	100	

Static Electrical Characteristics

Tj=25°C, Vcc=14V (unless otherwise specified)

Symbol	Parameter	Min.	Typ.	Max.	Units	Test Conditions
Rds(on)	ON state resistance Tj=25°C	—	80	120	mΩ	Vin=5V, Iout=2A
	ON state resistance Tj=150°C	—	150	230		Vin=5V, Iout=2A
	ON state resistance Tj=25°C, Vcc=6.5V	—	90	130		Vin=5V, Iout=2A
Vcc op.	Operating voltage range	6	—	35	V	
V clamp 1	Vcc to Out clamp voltage 1	65	70	—		Iout=30mA (see Fig. 1)
V clamp 2	Vcc to Out clamp voltage 2	—	70	75		Iout=1A (see Fig. 1)
Vf	Body diode forward voltage	—	1	1.35		Iout= 2.5A
Icc Off	Supply current when Off	—	2.5	10	µA	Vin=0V, Vout=0V
Icc On	Supply current when On	—	2.5	3.5	mA	Vin=5V
Iout@0V	Output leakage current	—	—	10	µA	Vout=0V
Iout@6V	Output leakage current	—	20	—		Vout=6V
Idg leakage	Diagnostic output leakage current	—	—	10		Vdg=5.5V
Vdgl	Low level diagnostic output voltage	—	0.2	0.3	V	Idg=1.6mA
Vih	Input high threshold voltage	—	2.5	3.5		
Vil	Input low threshold voltage	1	2	—		
In hys	Input hysteresis	0.15	0.4	1		
UV high	Under voltage high threshold voltage	—	5	5.9		
UV low	Under voltage low threshold voltage	3.4	4.5	—		
UV hys	Undervoltage hysteresis	0.1	0.8	1.5		
Iin On	Input current when device is On	—	40	80	µA	Vin=5V

Switching Electrical Characteristics

Vcc=14V, Resistive load=14Ω, Vin=5V, Tj=25°C

Symbol	Parameter	Min.	Typ.	Max.	Units	Test Conditions
Tdon	Turn-on delay time	—	12	35	µs	See Fig. 3
Tr1	Rise time to Vout=Vcc-5V	—	7	40		
Tr2	Rise time to Vout=0.9 x Vcc	—	14	50		
dV/dt (On)	Turn On dV/dt	—	0.95	3.5	V/µs	
EOn	Turn On energy	—	250	—	µJ	
Tdoff	Turn-off delay time	—	20	45	µs	
Tf	Fall time to Vout=0.1 x Vcc	—	6	25		
dV/dt (Off)	Turn Off dV/dt	—	1.8	5.5	V/µs	
EOff	Turn Off energy	—	20	—	µJ	
Tdiag	Vout to Vdiag propagation delay	—	15	—	µs	See Fig. 4 and Fig. 12

Protection Characteristics

Symbol	Parameter	Min.	Typ.	Max.	Units	Test Conditions
Ilim	Internal current limit	2	5	8	A	Vout=0V
Tsd+	Over temperature high threshold	150[1]	165	—	°C	See Fig. 2
Tsd-	Over temperature low threshold	—	158	—		
Vsc	Short-circuit detection voltage [2]	2	3	4	V	
Vopen load	Open load detection threshold	2	3	4		

[1] Guaranteed by design
[2] Reference to Vcc

Truth Table

Operating Conditions	IN	OUT	DG pin
Normal	H	H	H
Normal	L	L	L
Open Load	H	H	H
Open Load [3]	L	H	H
Short circuit to Gnd	H	L (limiting)	L
Short circuit to Gnd	L	L	L
Over-temperature	H	L (cycling)	L
Over-temperature	L	L	L

[3] With a pull-up resistor connected between the output and Vcc.

Lead Assignments

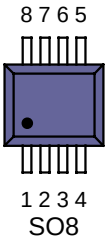

1- Gnd
2- In
3- DG
4- Out
5-6-7-8 Vcc

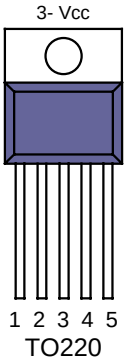

1- Gnd
2- In
3- Vcc
4- Dg
5- Out

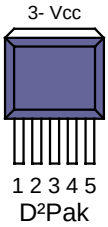

Functional Block Diagram

All values are typical

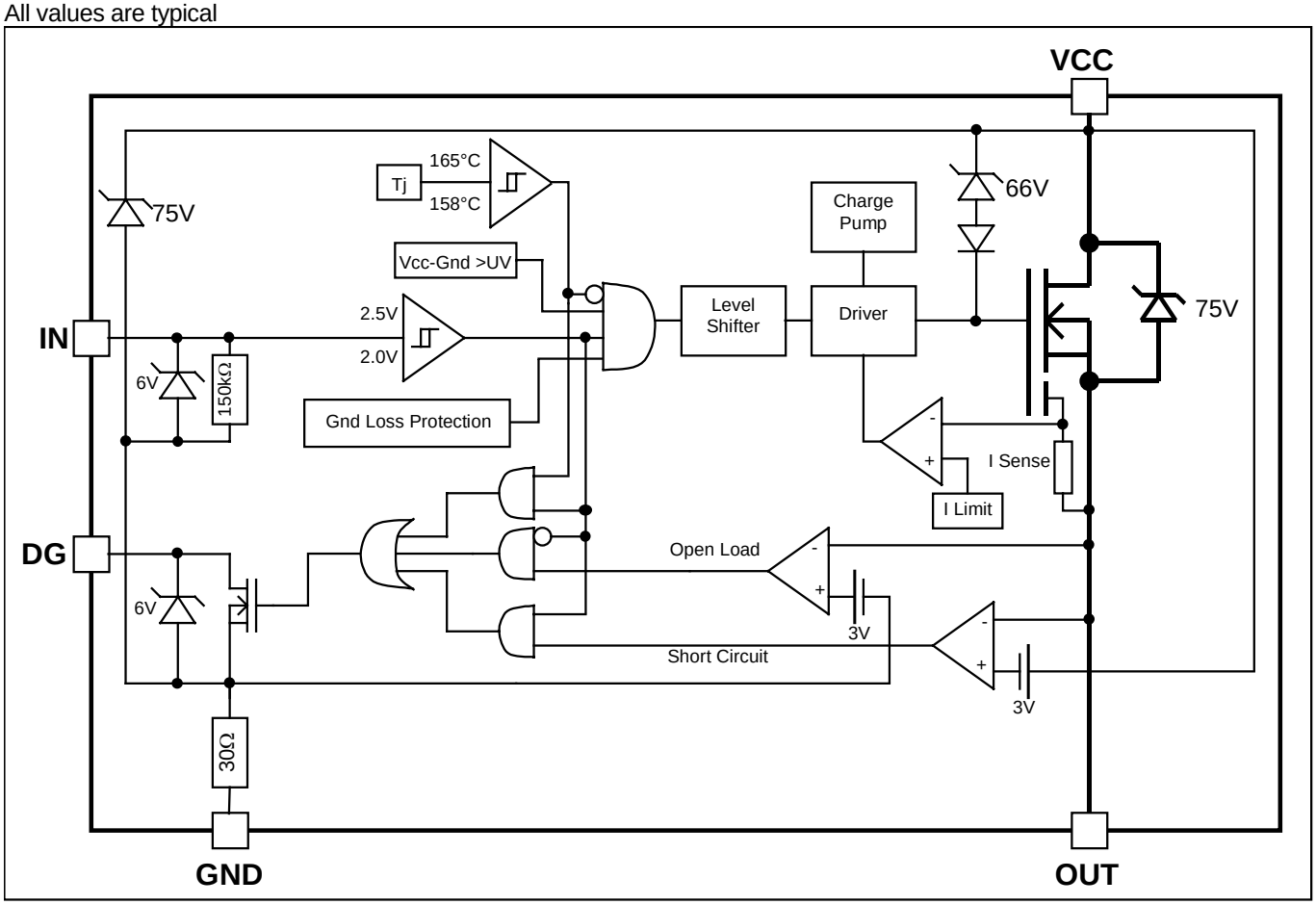

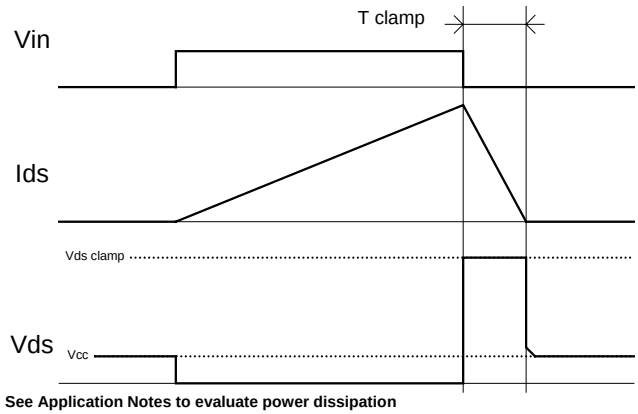

Figure 1 – Active clamp waveforms

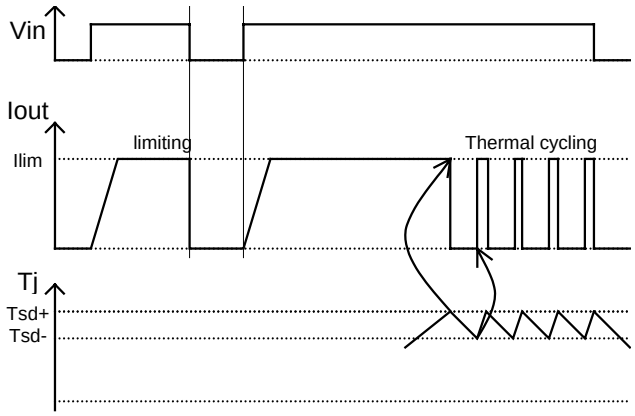

Figure 2 – Protection timing diagram

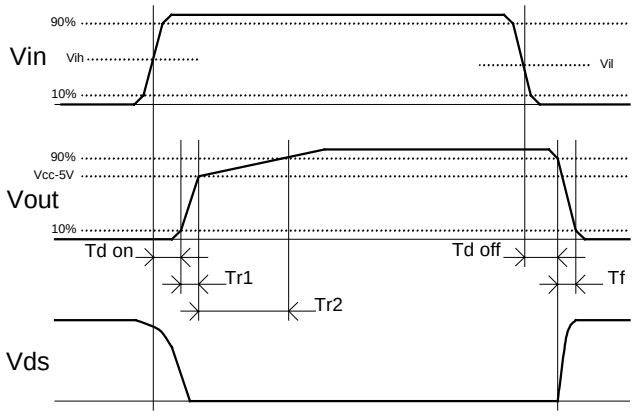

Figure 3 – Switching times definition

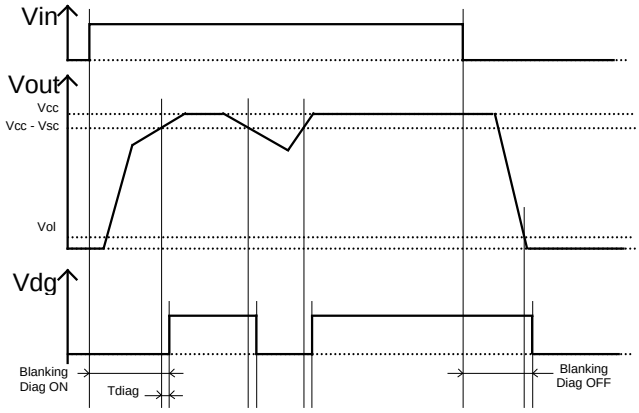

Figure 4 – Diagnostic delay definition

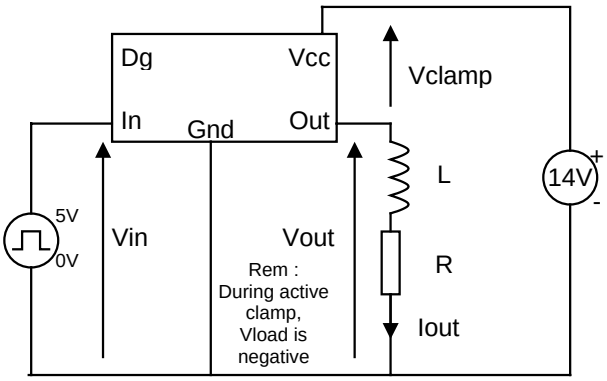

Figure 5 – Active clamp test circuit

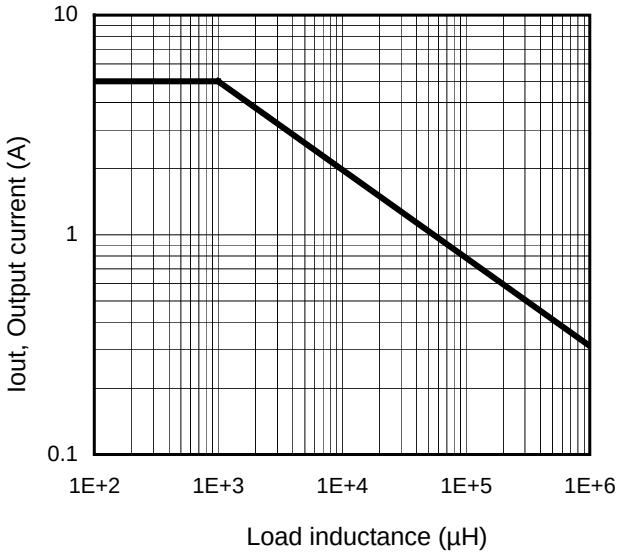

Figure 6 – Max. Output current (A) Vs Load inductance (µH)

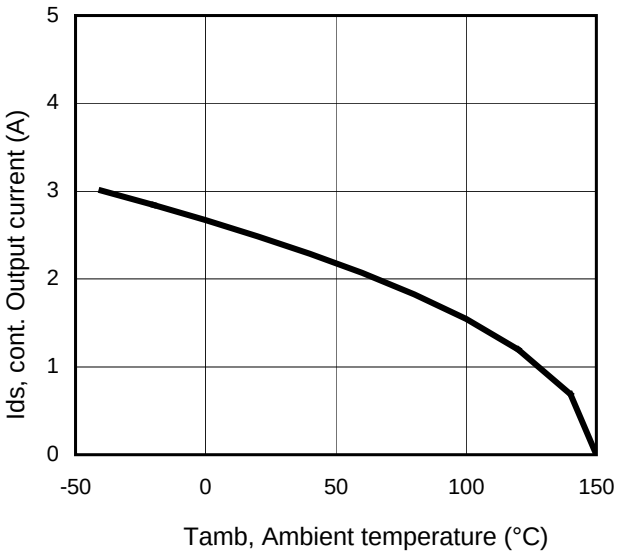

Figure 7 – Max. ouput current (A) Vs Ambient temperature (°C) Rth=100°C/W

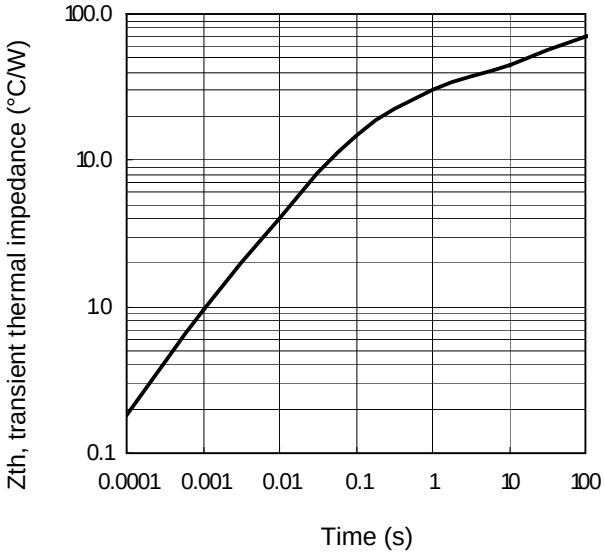

Figure 8 – Transient thermal impedance (°C/W) Vs time (s)

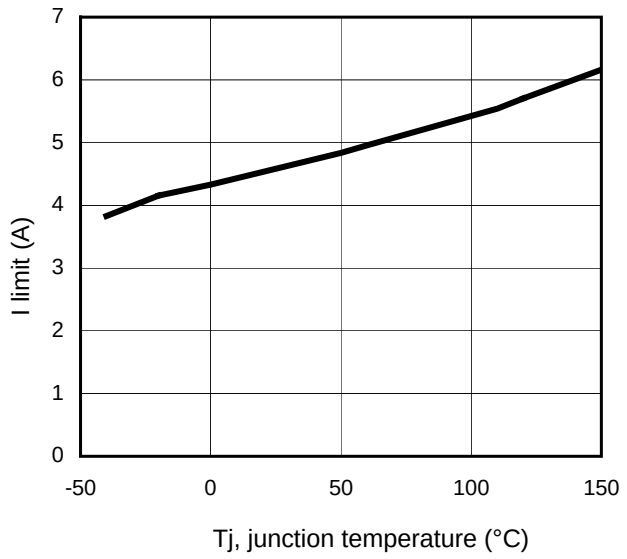

Figure 9 –I limit (A)
Vs junction temperature (°C)

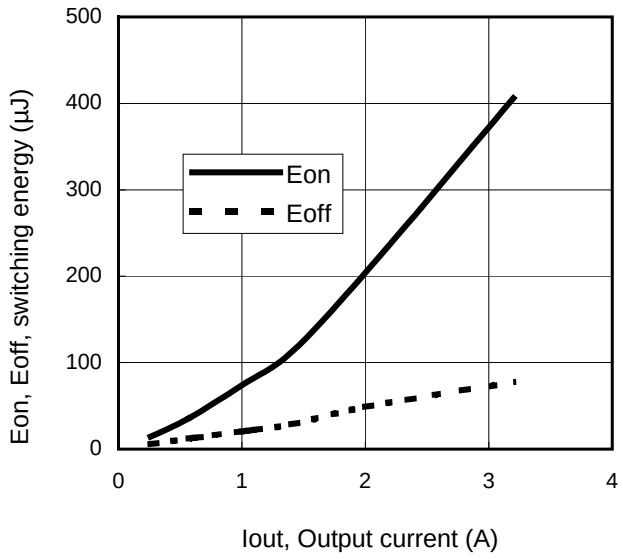

Figure 10 – Switching energy (µJ)
Vs Output current (A)

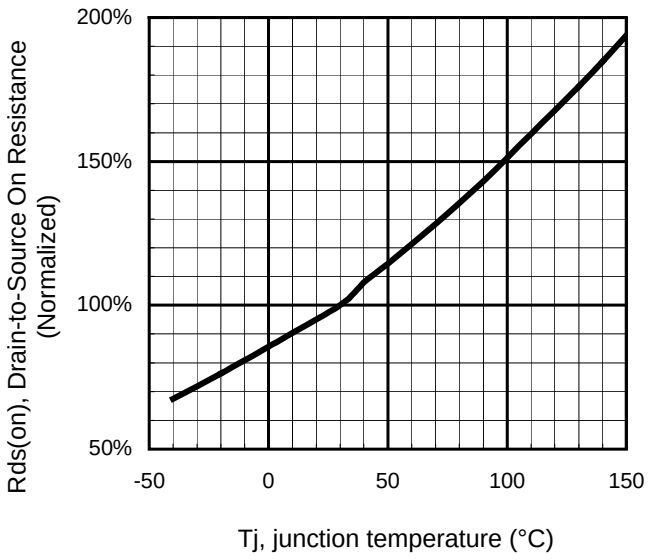

Figure 11 - Normalized Rds(on) (%) Vs Tj (°C)

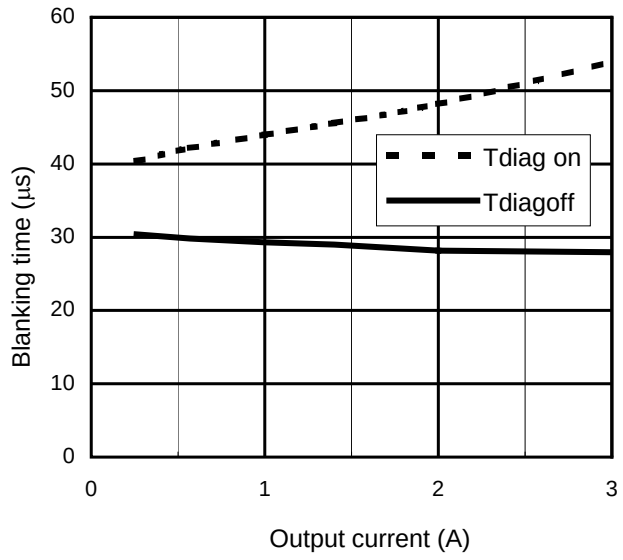

Figure 12 – Diagnosis Blanking time (µs)
Vs Output current (A)

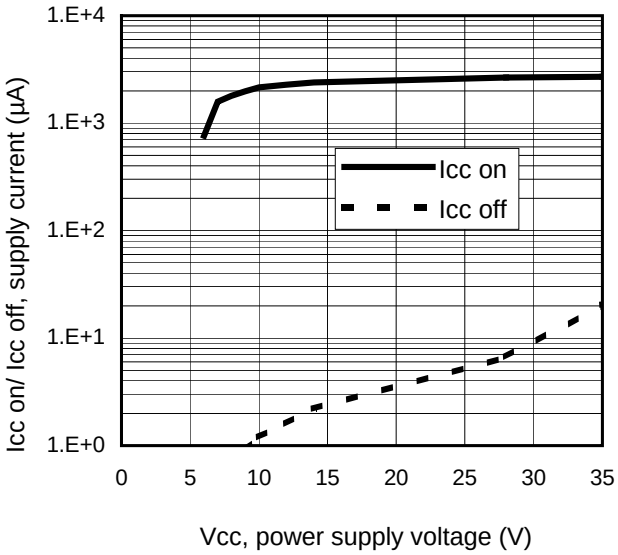

Figure 13 – Icc on/ Icc off (µA) Vs Vcc (V)

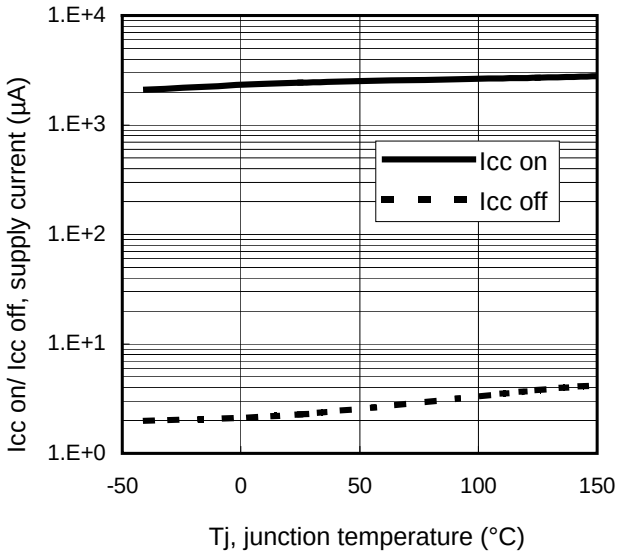

Figure 14 – Icc on/ Icc off (µA) Vs Tj (°C)

Case outline - TO220

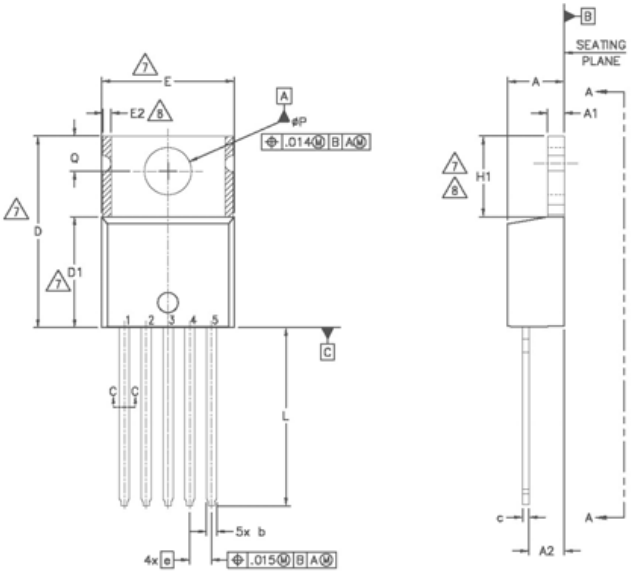

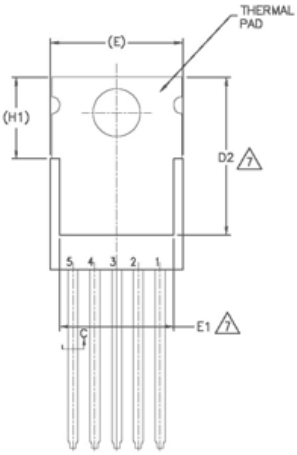

SECTION A–A

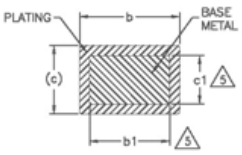

SECTION C–C

SYMBOL	DIMENSIONS				NOTES
	MILLIMETERS		INCHES		
	MIN.	MAX.	MIN.	MAX.	
A	3.56	4.83	.140	.190	
A1	0.51	1.40	.020	.055	
A2	2.03	2.92	.080	.115	
b	0.64	0.89	.025	.035	
b1	0.64	0.84	.025	.033	5
c	0.36	0.61	.014	.024	
c1	0.36	0.56	.014	.022	5
D	14.22	16.51	.560	.650	4
D1	8.38	9.02	.330	.355	
D2	11.68	12.88	.460	.507	7
E	9.65	10.67	.380	.420	4,7
E1	6.86	8.89	.270	.350	7
E2	–	0.76	–	.030	8
e	1.70 BSC		.067 BSC		
H1	5.84	6.86	.230	.270	7,8
L	12.70	14.73	.500	.580	
øP	3.53	3.73	.139	.147	
Q	2.54	3.05	.100	.120	

NOTES:

1.– DIMENSIONING AND TOLERANCING AS PER ASME Y14.5 M– 1994.
2.– DIMENSIONS ARE SHOWN IN INCHES [MILLIMETERS].
3.– LEAD DIMENSION AND FINISH UNCONTROLLED IN L1.
4.– DIMENSION D, D1 & E DO NOT INCLUDE MOLD FLASH. MOLD FLASH SHALL NOT EXCEED .005" (0.127) PER SIDE. THESE DIMENSIONS ARE MEASURED AT THE OUTERMOST EXTREMES OF THE PLASTIC BODY.
5.– DIMENSION b1 & c1 APPLY TO BASE METAL ONLY.
6.– CONTROLLING DIMENSION : INCHES.
7.– THERMAL PAD CONTOUR OPTIONAL WITHIN DIMENSIONS E,H1,D2 & E1
8.– DIMENSION E2 X H1 DEFINE A ZONE WHERE STAMPING AND SINGULATION IRREGULARITIES ARE ALLOWED.
9.– OUTLINE CONFORMS TO JEDEC TO-220, EXCEPT A2 (max.) AND D2 (min.) WHERE DIMENSIONS ARE DERIVED FROM THE ACTUAL PACKAGE OUTLINE.

10.– LEADS AND DRAIN ARE PLATED WITH 100% Sn

Case outline – D²Pak

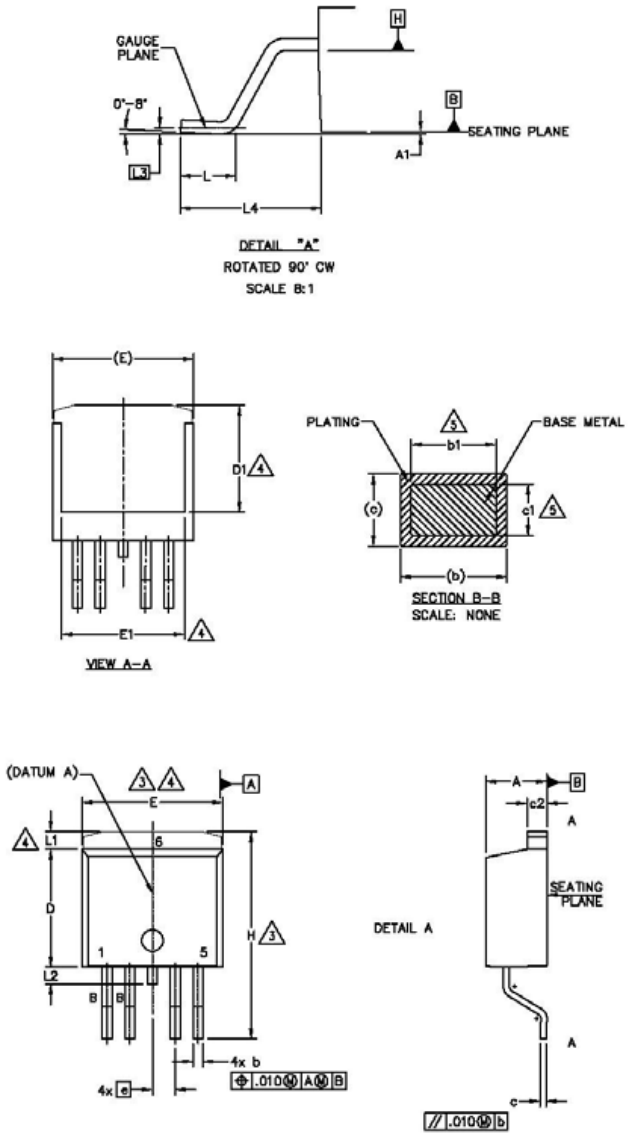

NOTES:

1. DIMENSIONING AND TOLERANCING AS PER ASME Y14.5M–1994
2. DIMENSIONS ARE SHOWN IN MILLIMETERS [INCHES].
3. DIMENSION D & E DO NOT INCLUDE MOLD FLASH. MOLD FLASH SHALL NOT EXCEED 0.127 [.005"] PER SIDE. THESE DIMENSIONS ARE MEASURED AT THE OUTMOST EXTREMES OF THE PLASTIC BODY AT DATUM H.
4. THERMAL PAD CONTOUR OPTIONAL WITHIN DIMENSION E, L1, D1 & E1.
5. DIMENSION b1 AND c1 APPLY TO BASE METAL ONLY.
6. DATUM A & B TO BE DETERMINED AT DATUM PLANE H.
7. CONTROLLING DIMENSION: INCH.
8. OUTLINE CONFORMS TO JEDEC OUTLINE TO-263BA.
9 LEADS AND DRAIN ARE PLATED : 100% Sn

SYMBOL	DIMENSIONS				NOTES
	MILLIMETERS		INCHES		
	MIN.	MAX.	MIN.	MAX.	
A	4.06	4.83	.160	.190	
A1	–	0.254	–	.010	
b	0.51	0.99	.020	.039	4
b1	0.51	0.89	.020	.035	
c	0.38	0.74	.015	.029	
c1	0.38	0.58	.015	.023	4
c2	1.14	1.65	.045	.065	
D	8.38	9.65	.330	.380	3
D1	6.86	–	.270	–	
E	9.65	10.67	.380	.420	3
E1	6.22	–	.245	–	
e	1.70 BSC		.067 BSC		
H	14.61	15.88	.575	.625	
L	1.78	2.79	.070	.110	
L1	–	1.68	–	.066	
L2	–	1.78	–	.070	
L3	0.25 BSC		.010 BSC		
L4	4.78	5.28	.188	.208	

Tape and reel – D²Pak

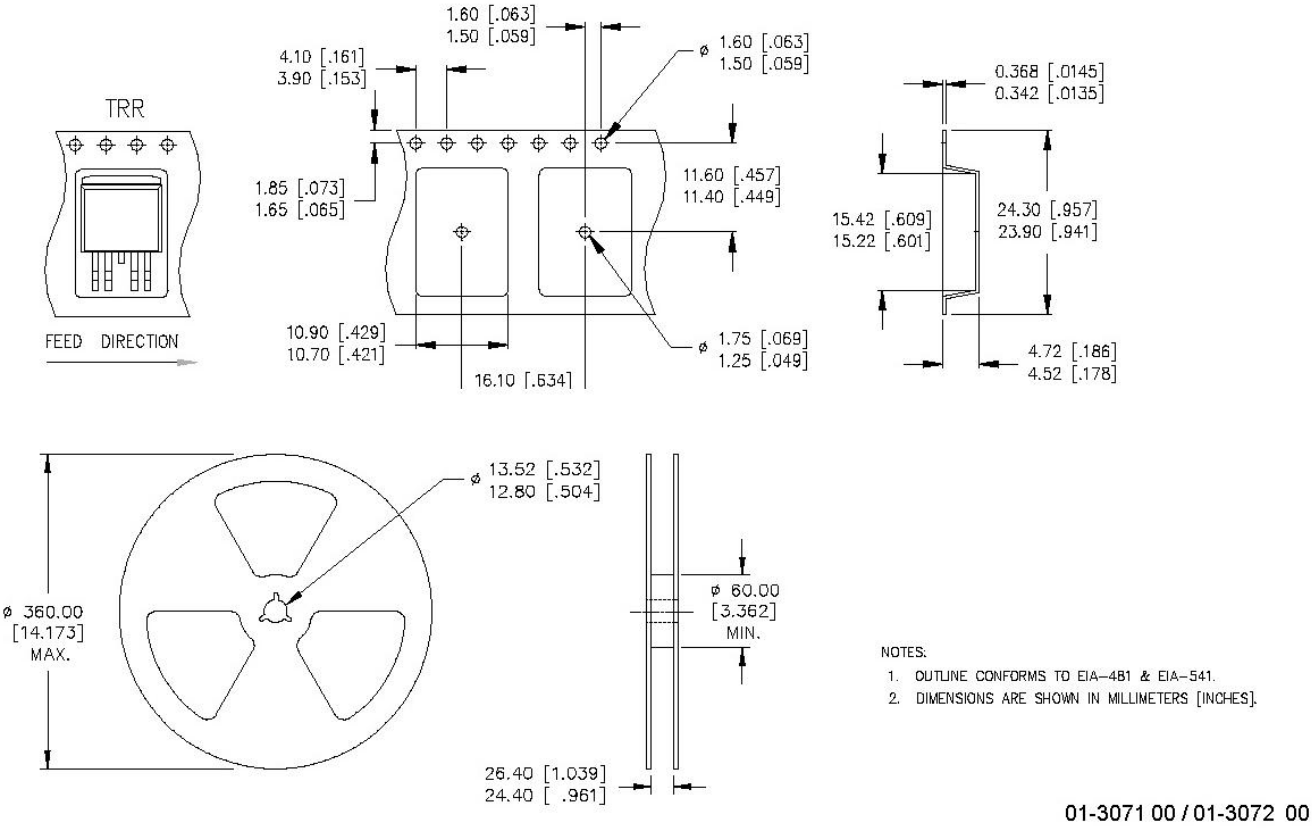

Case Outline - SO-8

Dimensions are shown in millimeters (inches)

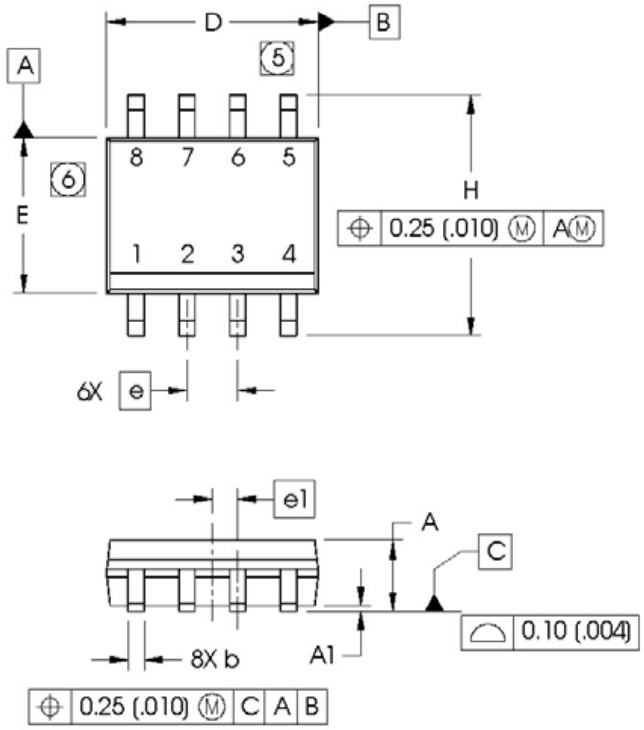

DIM	INCHES		MILLIMETERS	
	MIN	MAX	MIN	MAX
A	.0532	.0688	1.35	1.75
A1	.0040	.0098	0.10	0.25
b	.013	.020	0.33	0.51
c	.0075	.0098	0.19	0.25
D	.189	.1968	4.80	5.00
E	.1497	.1574	3.80	4.00
e	.050 BASIC		1.27 BASIC	
e 1	.025 BASIC		0.635 BASIC	
H	.2284	.2440	5.80	6.20
K	.0099	.0196	0.25	0.50
L	.016	.050	0.40	1.27
y	0°	8°	0°	8°

NOTES:

1. DIMENSIONING & TOLERANCING PER ASME Y14.5M-1994.
2. CONTROLLING DIMENSION: MILLIMETER
3. DIMENSIONS ARE SHOWN IN MILLIMETERS [INCHES].
4. OUTLINE CONFORMS TO JEDEC OUTLINE MS-012AA.
5. DIMENSION DOES NOT INCLUDE MOLD PROTRUSIONS. MOLD PROTRUSIONS NOT TO EXCEED 0.15 [.006].
6. DIMENSION DOES NOT INCLUDE MOLD PROTRUSIONS. MOLD PROTRUSIONS NOT TO EXCEED 0.25 [.010].
7. DIMENSION IS THE LENGTH OF LEAD FOR SOLDERING TO A SUBSTRATE.

FOOTPRINT

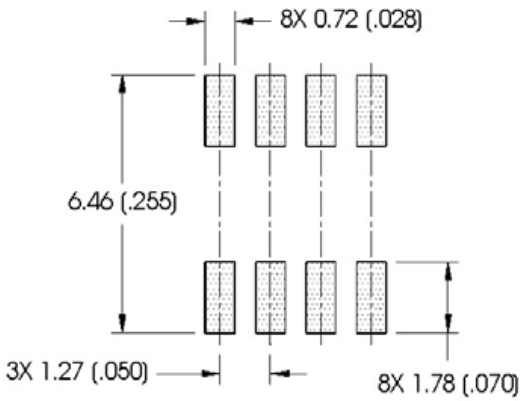

Tape & Reel - SO-8

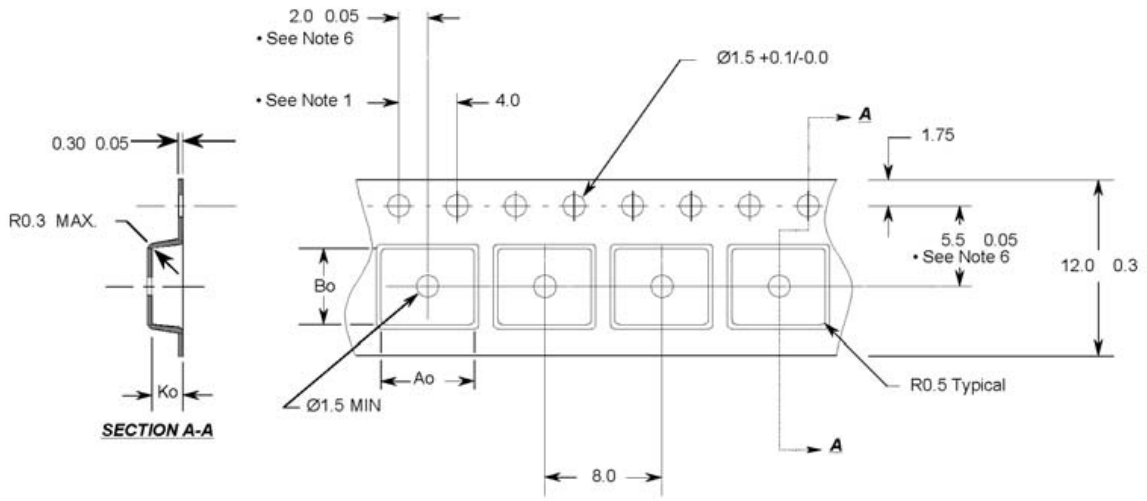

Notes:
1. 10 sprocket hole pitch cumulative tolerance 0.2
2. Camber not to exceed 1mm in 100mm
3. Material: Black Conductive Advantek Polystyrene
4. Ao and Bo measured on a plane 0.3mm above the bottom of the pocket
5. Ko measured from a plane on the inside bottom of the pocket to the top surface of the carrier.
6. Pocket position relative to sprocket hole measured as true position of pocket, not pocket hole.

Ao = 6.4 mm
Bo = 5.2 mm
Ko = 2.1 mm

- All Dimensions in Millimeters -

REVISION HISTORY
IPS7091G

Revision No.	Date	PD No. & Rev. Letter	Page No.	Description	Reason of Change
1		60291_B	all	Add new package version : TO220 / D2pak	
2	09/09/08	60291_C	7	Add Rth=100°C/W figure 7	Information missing