Excellent Integrated System Limited

Stocking Distributor

Click to view price, real time Inventory, Delivery & Lifecycle Information:

FCI
63734-101

For any questions, you can email us directly:
sales@integrated-circuit.com

PRODUCT NO.	PCB ATTACHMENT	P.C.B THICKNESS
63734–101	PRESS–PEG	2.4

NOTE 7

PRESS–FIT HOLES	
HOLE DIAMETER	
AFTER PLATING	0.65–0.80
DRILLED HOLE	0.81–0.86
COPPER PLATING	0.025 MIN.
SnPb OR Sn PLATING	0.005–0.015

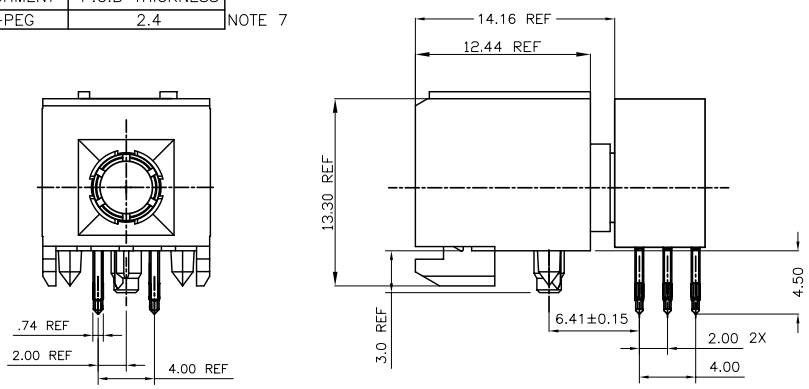

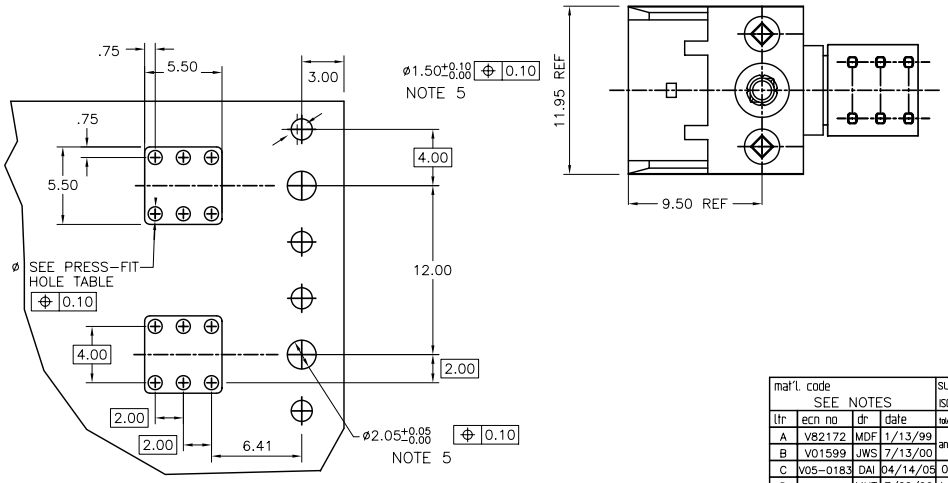

RECOMMENDED PC BOARD
HOLE PATTERN
(COMPONENT SIDE)

NOTES:

1. BODY MATERIAL: LCP, 30% GLASS–FILLED, FLAME RETARDENT, ACC, UL94–V0
2. TERMINAL MATERIAL: BeCu
3. PLATING SOLDER TAILS: 2.5µm SnPb
4. PLATING CONTACT AREA: 0.80µm Au OVER 1.3µm Ni.
5. INDICATED HOLES ARE UNPLATED
6. PRODUCT MARKING: PART NUMBER & BATCH I.D.
7. ADD "LF" SUFFIX AT THE END OF PART NUMBER FOR LEAD FREE OPTION.
8. THIS PRODUCT MEETS EUROPEAN UNION DIRECTIVES AND OTHER COUNTRY REGULATION AS DESCRIBED IN GS–22–008.
9. THE HOUSING WILL WITHSTAND EXPOSURE TO 260°C PEAK TEMPERATURE FOR 15 SECONDS IN A WAVE SOLDER APPLICATION WITH A 1.5mm MINIMUM THICK CIRCUIT BOARD OR FOR 20 SECONDS IN A CONVECTION, INFRA–RED OR VAPOR PHASE REFLOW OVEN. SEE APPLICATION NOTES/PROCEDURES IF THEY ARE AVAILABLE.

mat'l. code				surface	tolerance	projection	product family
SEE NOTES				ISO 1302	ISO 406 ISO 1101		METRAL (tm)
ltr	ecn no	dr	date	tolerances unless otherwise specified			title
A	V82172	MDF	1/13/99	angles	linear .0±.3	MM	POWER CONNECTOR
B	V01599	JWS	7/13/00	0°±2°	.00±.13		ASSEMBLY, 5 ROW
C	V05–0183	DAI	04/14/05		.000±.0051	scale 1:1	
D	M06–0277	MHT	7/22/06	dr	M.FETROW	12/16/98	dwg no 63734 sheet 1 of 1 size A3
E	M07–0111	MHT	2/14/07	engr	C.PENDLETON	12/16/98	
F	M08–0134	MHT	5/14/08	chr	C.PENDLETON	12/16/98	
				appd	C.PENDLETON	12/16/98	type Product Customer Drawing
sheet index	revision sheet	F 1					

form A3

Copyright FCI
FCIconnect.com