Excellent Integrated System Limited

Stocking Distributor

Click to view price, real time Inventory, Delivery & Lifecycle Information:

FCI
74903-709

For any questions, you can email us directly:
sales@integrated-circuit.com

PRODUCT NUMBER
SEE SHT. 2

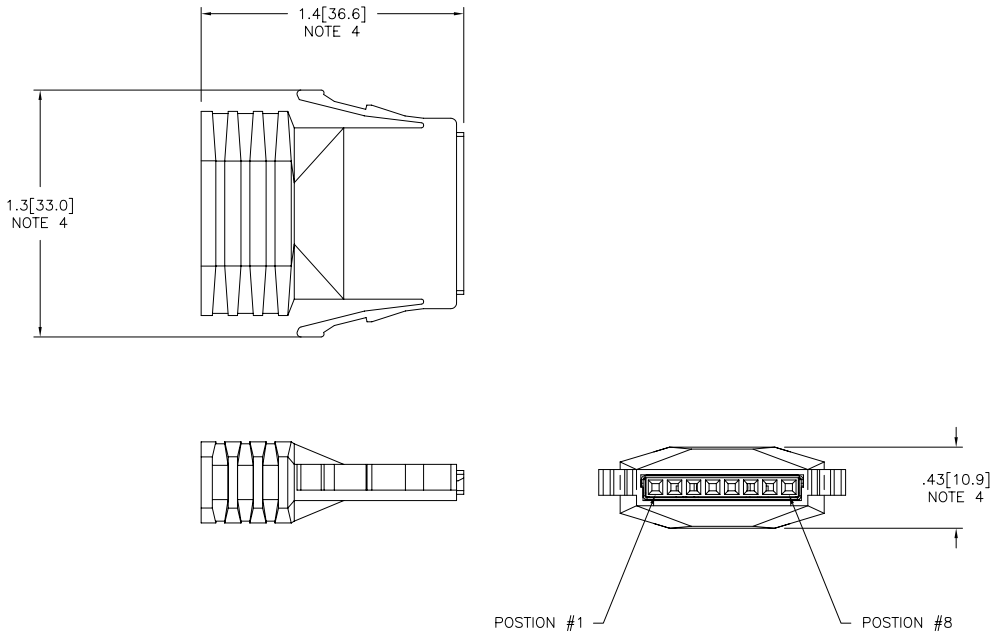

mat'l. code				surface ISO 1302	tolerance ISO 406 ISO 1101	projection	product family LATCH-N-LOK
				tolerances unless otherwise specified			title
ltr	ecn no	dr	date	angles	linear	INCH/MM	1X8 LATCH-N-LOK 360° SHIELDED PLUG CONN. KIT W/O PV'S
D	V91916	TGD	10/7/99		.XX±.01/.3		
E	V92065	RGD	10/29/99		.XXX±.005/.13		
F	V01017	TFG	5/15/00	0°±2°	.XXXX±.0020/.051	scale 1:1	
G	V01050	TFG	6/5/00	dr M. HERNANDEZ	12/03/04		dwg no 74903 sheet 1 of 3 size A3
H	V01093	TFG	7/6/00	engr M. BARRIOS	12/03/04		
J	M04-0229	MHT	12/03/04	chr M. BARRIOS	12/03/04		
K	M06-0365	AGS	9/20/06	appd M. BARRIOS	12/03/04		type Product Customer Drawing
sheet	revision	K	K	K			
index	sheet	1	2	3			

form: A3

FCIconnect.com
Copyright FCI

PDM: Rev:K STATUS **Released** Printed: Jul 24, 2010

74903–TUVLF

U	COLOR	
~~01~~	~~LT GRAY~~	OBS
02	OFF WHITE	
~~03~~	~~DK. GRAY~~	OBS
04	BLACK	
~~05~~	~~SLATE GRAY~~	OBS
07	SILVER GRAY	
~~08~~	~~PEARL WHITE~~	OBS
09	PEBBLE GRAY	

T	HOLE DIA.
7	.265/6.73
9	.312/7.92

EXAMPLE

74903–707LF: IS A 1x8 REAR EXIT PLUG
IN SILVER GRAY WITH A CABLE EXIT
HOLE SIZE OF .265 [6.73] CABLE RANGE ,

FCIconnect.com

Copyright FCI

mat'l. code				surface ISO 1302	tolerance ISO 406 ISO 1101	projection	product family LATCH–N–LOK
ltr	ecn no	dr	date	tolerances unless otherwise specified			title
K				angles	linear .XX±.01/.3	INCH/MM	1X8 LATCH–N–LOK 360° SHIELDED PLUG CONN. KIT W/O PV'S
				0°±2°	.XXX±.005/.13 .XXXX±.0020/.051	scale 1:1	
				dr	M. HERNANDEZ 12/03/04		dwg no 74903 sheet 2 of 3 size A3
				engr	M. BARRIOS 12/03/04		
				chr	M. BARRIOS 12/03/04		
				appd	M. BARRIOS 12/03/04		type Product Customer Drawing
sheet index	revision sheet						

form: A3

PDM: Rev:K STATUS **Released** Printed: Jul 24, 2010

NOTES:

1. EACH KIT CONTAINS ONE EACH OF THE FOLLOWING COMPONENTS
   LATCH–N–LOK PLUG
   LATCH–N–LOK END CAP
   MINI LATCH HOUSING
   360° SHIELD CANS.
2. COMPONENTS ARE BULK PACKAGED WITH 100 pcs. OF A COMPONENT PER BAG. PVC's MUST BE ORDERED SEPARATELY.
3. MATERIALS USED: PLUGS AND CAPS ARE MOLDED IN POLYCARBONATE. THE MINI LATCH HOUSING ARE MOLDED IN NYLON. COLOR IS BLACK. THE SHIELD CAN IS 3/4 HARD BRASS PLATED WITH 2.5um MIN. BRIGHT TIN. 1.0um MIN. NICKEL UNDERPLATE.
4. DIMENSIONS ARE APPROXIMATE AND REFLECT PLUG IN UNLATCHED STATE.
5. PART NUMBERS WITH LF IN THE END ARE LEAD FREE.
6. THIS PRODUCT MEETS EUROPEAN UNION DIRECTIVES AND OTHER COUNTRY REGULATION AS DESCRIBED IN GS–22–008.

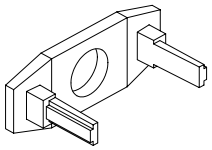

REAR CAP

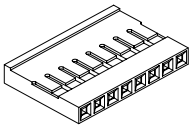

MINI LATCH HOUSING

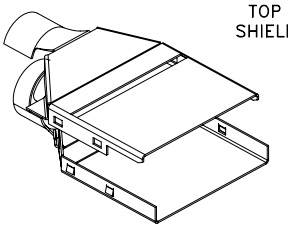

TOP SHIELD

BOTTOM SHIELD

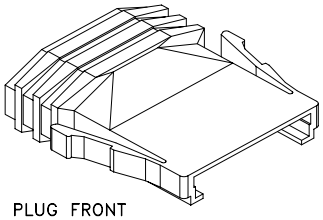

PLUG FRONT

mat'l. code				surface ISO 1302 √	tolerance ISO 406 ISO 1101	projection	product family LATCH–N–LOK
ltr	ecn no	dr	date	tolerances unless otherwise specified			title
K				angles	linear .XX±.01/.3	INCH/MM	1X8 LATCH–N–LOK 360° SHIELDED PLUG CONN. KIT W/O PV'S
				0°±2°	.XXX±.005/.13 .XXXX±.0020/.051	scale 1:1	
				dr	M. HERNANDEZ 12/03/04	FCI	dwg no 74903 sheet 3 of 3 size A3
				engr	M. BARRIOS 12/03/04		
				chr	M. BARRIOS 12/03/04		
				appd	M. BARRIOS 12/03/04		type Product Customer Drawing
sheet index	revision sheet						

form: A3

FCIconnect.com
Copyright FCI

PDM: Rev:K STATUS **Released** Printed: Jul 24, 2010