Excellent Integrated System Limited

Stocking Distributor

Click to view price, real time Inventory, Delivery & Lifecycle Information:

FCI
HM2P08PDM2J5N9LF

For any questions, you can email us directly:
sales@integrated-circuit.com

Distributor of FCI: Excellent Integrated System Limited
Datasheet of HM2P08PDM2J5N9LF - CONN HEADER 125POS TYPE B VERT
Contact us: sales@integrated-circuit.com Website: www.integrated-circuit.com

BS,C ,202788,044 D

GEN. ST.	01	02	03	04	05	06	07	08	0D	50	60	70	80	90
INT. ST.	10 11 12	13 14 18	20 31 32	33 34 38	39 40 42	43 44 45	46 48 56	70 72 73	75 76 81	82 83 84	88			

REV.	DATE	DESCRIPTION	BY	C'K'D'
A	2001-09-14	CONVERSION REVISION 03	KN	
B	2002-05-28	EC BZ0086	NF	
C	2005-10-20	105-0201	VIVEK	BKP
D	2006-08-09	106-0145	VIVEK	BKP

LOADING PATTERN MATING SIDE

f	6	6	6	6	6	6	6	6	6	6	6	6	6	6	6	6	6	6	6	6	6	6	6	6
e	6	5	5	6	5	5	6	5	5	5	5	5	5	5	5	5	5	5	5	5	5	5	5	5
d	6	5	5	6	5	5	6	5	5	5	5	5	5	5	5	5	5	5	5	5	5	5	5	5
c	6	5	5	6	5	5	6	5	5	5	5	5	5	5	5	5	5	5	5	5	5	5	5	5
b	6	5	5	6	5	5	6	5	5	5	5	5	5	5	5	5	5	5	5	5	5	5	5	5
a	6	5	5	6	5	5	6	5	5	5	5	5	5	5	5	5	5	5	5	5	5	5	5	5
z	0	0	0	0	0	0	0	0	0	0	0	0	0	0	0	0	0	0	0	0	0	0	0	0
POS	01				05				10					15					20					25

NOTE : NOT TO BE MATED WITH A FREE BOARD CONNECTOR.
LEVEL 3 IN ROW B IS NOT ALLOWED PER IEC 1076-4-101.

LOADED CONNECTOR ASSEMBLY
(FOR EXAMPLE)

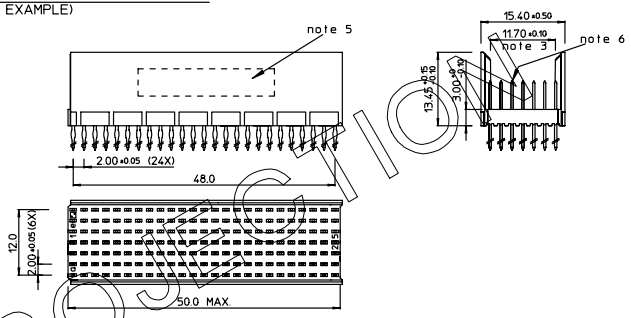

CONTACT OVERVIEW

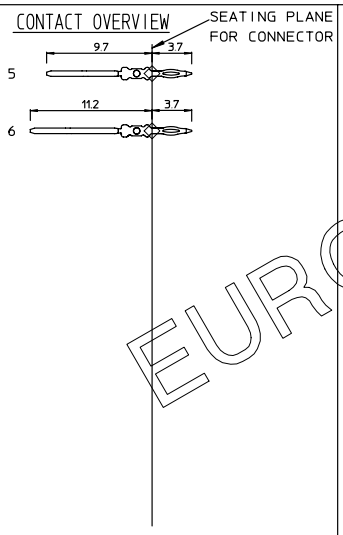

LAY-OUT P.C.B.-HOLE

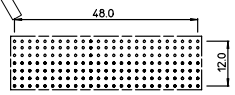

HM2P08PDM2J5_ _ _ _

LEAD FREE INDICATOR : LF = LEAD FREE
(DIGIT 15 & 16)

PLATING CODE (DIGIT 13 AND 14)
(REF DWG No. BS,C ,201844,003)

NOTES:

1. THIS PRODUCT IS CSA APPROVED.
2. THIS PRODUCT IS UL RECOGNIZED.
3. MEASURED AT THE BOTTOM.
4. MATERIAL CONTACT: PHOSPHORBRONZE
   HOUSING: CREAM WHITE GLASSFILLED POLYESTER UL-94V0
5. CONNECTOR PRINTED WITH P/N AND DATE CODE.
6. FOR ACTUAL CONTACT LOADINGS, SEE LOADING PATTERN MATING SIDE.
7. SHAPE OF CONNECTOR HOUSING CAN ALTER DEPENDING ON PRODUCTION LOCATION.
8. THE PRODUCT (LF) MEETS EUROPEAN UNION DIRECTIVES AND OTHER COUNTRY REGULATIONS AS DESCRIBED IN GS-22-008
9. FOR RECOMMENDED PTH DIMENSIONS REFER DRAWING : BS,A ,201572,001

	APPR.	DATE	SIGN.
1DEC ±0,2	DRAFT	2000-10-02	M.Fret
2DEC ±0,1	CHECKED		
ANGLES ±1°	PROD. MGR		
	PR.ENG.MGR		
	PR.MGT.MGR		

WE RESERVE THE RIGHT TO CHANGE DIMENSIONS OR REQUIREMENTS WITHOUT PRIOR NOTICE.

ALL DIMENSIONS IN MM

REFERENCES

MPACS 5+2R STR HDR SG PF ASSY TYPE B

CAT. No. HM2P08PDM2J5----

FCI www.fciconnect.com

SCALE

BS,C ,202788,044 — DRAWING No. — CUSTOMER DRAWING

D — REVISION

THIS IS OUR EXCLUSIVE PROPERTY. IT IS NOT TO BE COPIED, REPRINTED OR DISCLOSED TO A THIRD PARTY, NOR USED FOR MANUFACTURING WITHOUT OUR WRITTEN CONSENT, AND HAS TO BE RETURNED TO US IN CASE OF NO USAGE

DIT IS ONZE EIGENDOM EN MAG NOCH NAGEMAAKT, HERDRUKT, OVERGEHAAKT AAN DERDEN, NOCH VOOR FABRICATIE GEBRUIKT WORDEN, ZONDER ONZE SCHRIFTELIJKE TOELATING. BIJ NIET GEBRUIK IS TERUGZENDING VERPLICHT.

EUROPEAN PROJECTION

PDM: Rev:D STATUS: Released Printed: Dec 03, 2007