Excellent Integrated System Limited

Stocking Distributor

Click to view price, real time Inventory, Delivery & Lifecycle Information:

CUI Inc.
PJ-059AH

For any questions, you can email us directly:
sales@integrated-circuit.com

Distributor of CUI Inc.: Excellent Integrated System Limited
Datasheet of PJ-059AH - CON PWR JCK 2.0 X 5.7MM HIGH CUR
Contact us: sales@integrated-circuit.com Website: www.integrated-circuit.com
For more information, please visit the product page | For information on related products, view External Power Supplies

MODEL: PJ-059AH | DESCRIPTION: DC POWER JACK

FEATURES

- 2.0 mm center pin
- 5.0 A rating
- right-angle orientation
- through hole
- locking type
- tapered pins

SPECIFICATIONS

parameter	conditions/description	min	typ	max	units
rated input voltage			24		Vdc
rated input current				5.0	A
contact resistance[1]	between terminal and mating plug between terminal in a closed circuit			50 30	mΩ mΩ
insulation resistance	at 500 Vdc	100			MΩ
voltage withstand	at 50/60Hz for 1 minute			500	Vac
insertion/withdrawal force		0.3		3	kg
terminal strength	any direction for 10 seconds			500	g
operating temperature		-25		85	°C
life			5,000		cycles
flammability rating	UL94V-0				
RoHS	2011/65/EU				

Note: 1. When measured at a current of less than 100 mA/1 kHz

SOLDERABILITY

parameter	conditions/description	min	typ	max	units
wave soldering	dipped in solder pot for 5 ±0.5 seconds	255	260	265	°C

Distributor of CUI Inc.: Excellent Integrated System Limited
Datasheet of PJ-059AH - CON PWR JCK 2.0 X 5.7MM HIGH CUR
Contact us: sales@integrated-circuit.com Website: www.integrated-circuit.com
For more information, please visit the product page | For information on related products, view External Power Supplies

MECHANICAL DRAWING

units: mm[inches]
tolerance:
X.X ±0.2mm
X.XX ±0.1mm
X.XXX ±0.05mm

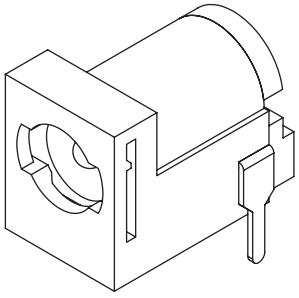

	MATERIAL	PLATING
center pin	copper	nickel
terminal 1	brass	silver
terminal 2	copper alloy	silver
terminal 3	brass	silver
plastic	PBT	

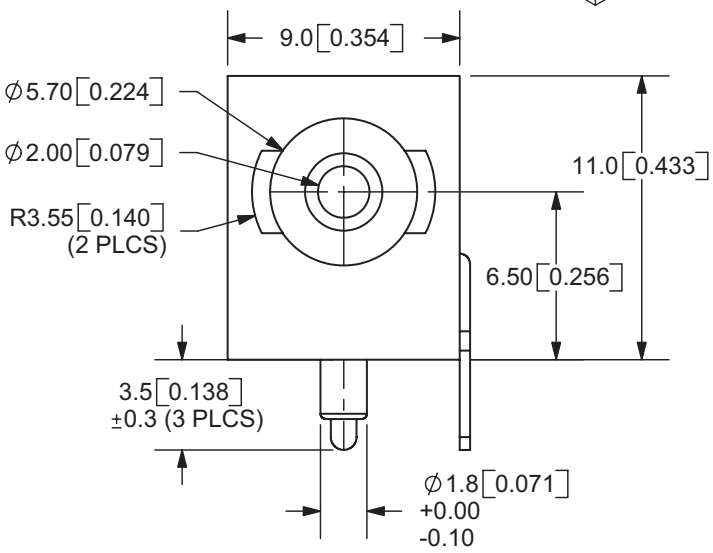

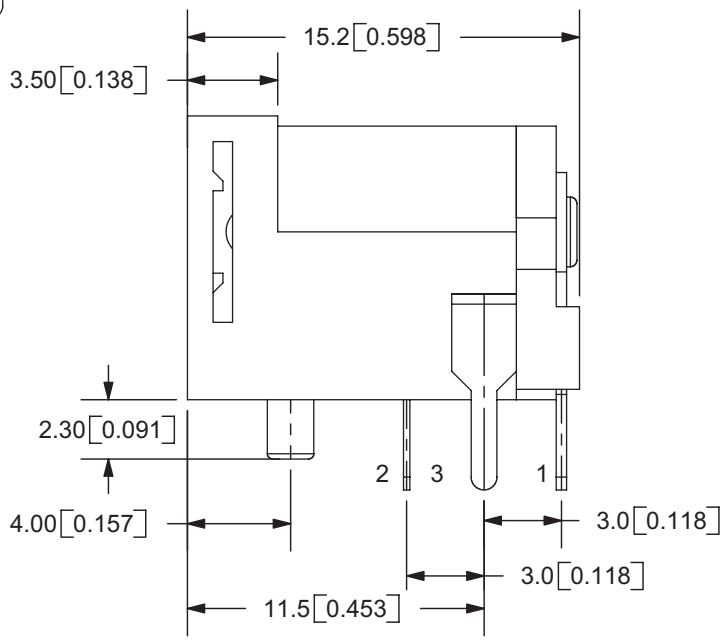

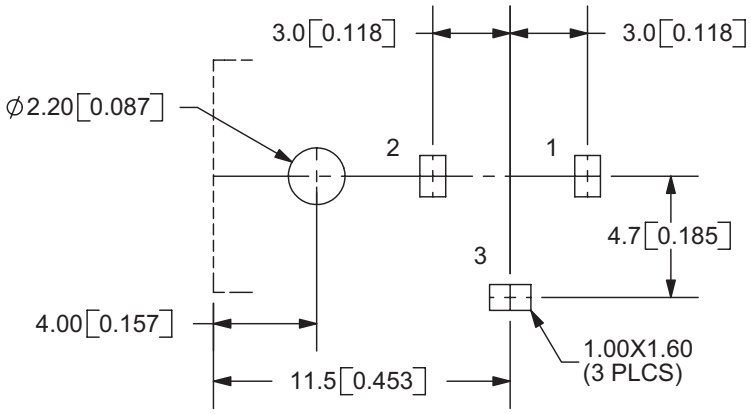

PCB LAYOUT
TOP VIEW

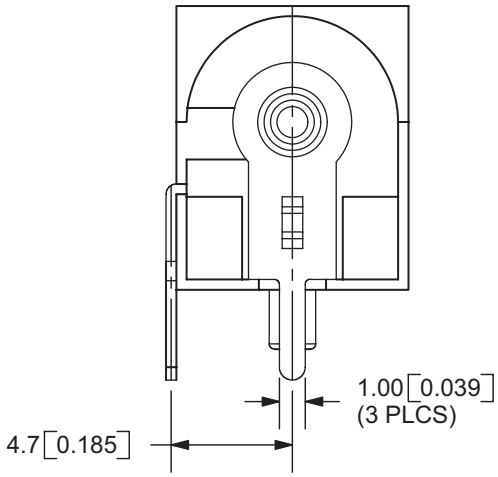

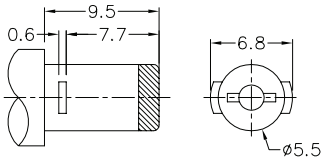

MATING PLUG
Jack Insertion Depth: 9.8 mm

SCHEMATIC	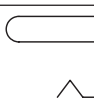
Model	PJ-059AH
Center Pin	Ø2.0 mm

Note: 1. All specifications measured at 10~35°C, humidity at 45~85%, under standard atmospheric pressure, unless otherwise noted.

Distributor of CUI Inc.: Excellent Integrated System Limited
Datasheet of PJ-059AH - CON PWR JCK 2.0 X 5.7MM HIGH CUR
Contact us: sales@integrated-circuit.com Website: www.integrated-circuit.com
For more information, please visit the product page | For information on related products, view External Power Supplies

REVISION HISTORY

rev.	description	date
1.0	initial release	07/30/2007
1.01	applied new spec template	01/06/2014
1.02	increased voltage rating	04/22/2016

The revision history provided is for informational purposes only and is believed to be accurate.

Headquarters
20050 SW 112th Ave.
Tualatin, OR 97062
800.275.4899

Fax 503.612.2383
cui.com
techsupport@cui.com

CUI offers a one (1) year limited warranty. Complete warranty information is listed on our website.

CUI reserves the right to make changes to the product at any time without notice. Information provided by CUI is believed to be accurate and reliable. However, no responsibility is assumed by CUI for its use, nor for any infringements of patents or other rights of third parties which may result from its use.

CUI products are not authorized or warranted for use as critical components in equipment that requires an extremely high level of reliability. A critical component is any component of a life support device or system whose failure to perform can be reasonably expected to cause the failure of the life support device or system, or to affect its safety or effectiveness.