Excellent Integrated System Limited

Stocking Distributor

Click to view price, real time Inventory, Delivery & Lifecycle Information:

IXYS Corporation
MLO110-08IO7

For any questions, you can email us directly:
sales@integrated-circuit.com

IXYS

MMO 110
MLO 110

AC Controller Modules

I_{RMS} = 112 A
V_{RRM} = 800-1400 V

Preliminary Data

V_{RSM} V_{DSM} V	V_{RRM} V_{DRM} V	Type	
800	800	MMO 110-08io7	MLO 110-08io7
1200	1200	MMO 110-12io7	MLO 110-12io7
1400	1400	MMO 110-14io7	MLO 110-14io7

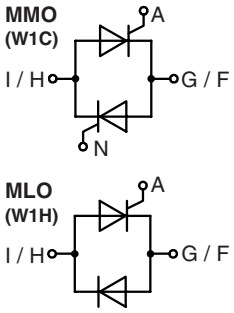

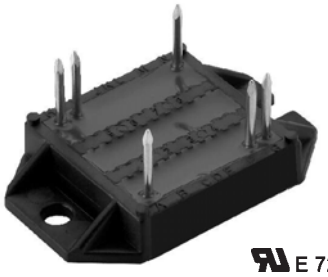

Symbol	Conditions		Maximum Ratings	
I_{RMS}	T_C = 85°C, 50 - 400 Hz, module		112	A
I_{TRMS}			81	A
I_{TAVM}	T_C = 85°C; (180° sine)		51	A
I_{TSM}	T_{VJ} = 45°C	t = 10 ms (50 Hz), sine	1000	A
	V_R = 0	t = 8.3 ms (60 Hz), sine	1070	A
	T_{VJ} = 125°C	t = 10 ms (50 Hz), sine	870	A
	V_R = 0	t = 8.3 ms (60 Hz), sine	930	A
I^2t	T_{VJ} = 45°C	t = 10 ms (50 Hz), sine	5000	A^2s
	V_R = 0	t = 8.3 ms (60 Hz), sine	4810	A^2s
	T_{VJ} = 125°C	t = 10 ms (50 Hz), sine	3780	A^2s
	V_R = 0	t = 8.3 ms (60 Hz), sine	3630	A^2s
$(di/dt)_{cr}$	T_{VJ} = 125°C f = 50 Hz, t_P = 200 µs $V_D = {}^2/_3\ V_{DRM}$	repetitive, I_T = 50 A	100	A/µs
	I_G = 0.45 A di_G/dt = 0.45 A/µs	non repetitive, $I_T = I_{TAVM}$	500	A/µs
$(dv/dt)_{cr}$	T_{VJ} = 125°C; $V_{DR} = {}^2/_3\ V_{DRM}$ R_{GK} = ∞; method 1 (linear voltage rise)		1000	V/µs
P_{GM}	T_{VJ} = 125°C	t_p = 30 µs	10	W
	$I_T = I_{TAVM}$	t_p = 300 µs	5	W
P_{GAVM}			0.5	W
V_{RGM}			10	V
T_{VJ}			-40...+150	°C
T_{VJM}			150	°C
T_{stg}			-40...+125	°C
V_{ISOL}	50/60 Hz, RMS	t = 1 min	2500	V~
	$I_{ISOL} \leq$ 1 mA	t = 1 s	3000	V~
M_d	Mounting torque (M4)		1.5...2.0/14...18	Nm/lb.in.
Weight	typ.		18	g

Data according to IEC 60747 and to a single thyristor/diode unless otherwise stated.

Features

- Thyristor controller for AC (circuit W1C acc. to IEC) for mains frequency
- Isolation voltage 3000 V~
- Planar glass passivated chips
- Low forward voltage drop
- Lead suitable for PC board solering

Applications

- Switching and control of single and three phase AC circuits
- Light and temperature control
- Softstart AC motor controller
- Solid state switches

Advantages

- Easy to mount with two screws
- Space and weight savings
- Improved temperature and power cycling
- High power density
- Small and light weight

IXYS reserve the right to change limits, conditions and dimensions.

241

© 2002 IXYS All rights reserved

IXYS

MMO 110
MLO 110

Symbol	Conditions		Characteristic Values		
I_D, I_R	T_{VJ} = 125°C; $V_R = V_{RRM}$; $V_D = V_{DRM}$		≤	5	mA
V_T	I_T = 150 A; T_{VJ} = 25°C		≤	1.57	V
V_{T0}	For power-loss calculations only			0.85	V
r_T				5.6	mΩ
V_{GT}	V_D = 6 V	T_{VJ} = 25°C	≤	1.5	V
		T_{VJ} = -40°C	≤	1.9	V
I_{GT}	V_D = 6 V	T_{VJ} = 25°C	≤	100	mA
		T_{VJ} = -40°C	≤	200	mA
V_{GD}	T_{VJ} = 125°C; V_D = ⅔ V_{DRM}		≤	0.2	V
I_{GD}			≤	1	mA
I_L	T_{VJ} = 25°C; t_P = 10 µs I_G = 0.45 A; di_G/dt = 0.45 A/µs		≤	200	mA
I_H	T_{VJ} = 25°C; V_D = 6 V; R_{GK} = ∞		≤	100	mA
t_{gd}	T_{VJ} = 25°C; V_D = ½ V_{DRM} I_G = 0.45 A; di_G/dt = 0.45 A/µs		≤	2	µs
R_{thJC}	per thyristor; DC			0.8	K/W
	per module			0.4	K/W
R_{thCH}	per thyristor; sine 180° el		typ.	0.12	K/W
	per module		typ.	0.06	K/W
d_S	Creeping distance on surface			11.2	mm
d_A	Creepage distance in air			17.0	mm
a	Max. allowable acceleration			50	m/s^2

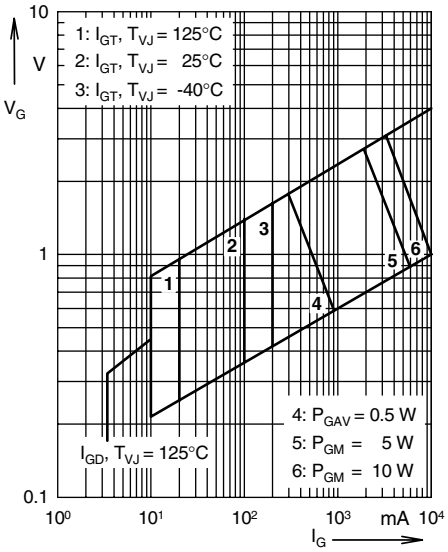

Fig. 1 Gate trigger characteristics

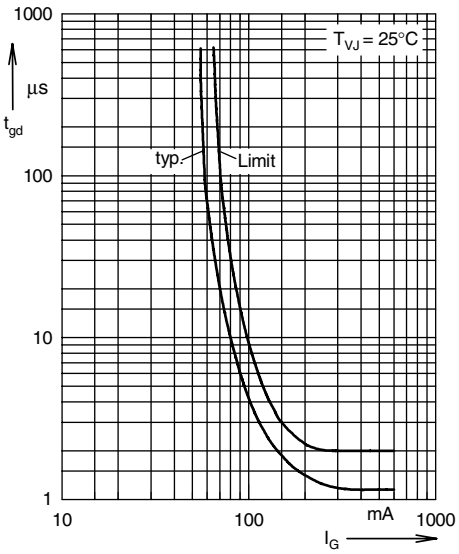

Fig. 2 Gate trigger delay time

Dimensions in mm (1 mm = 0.0394")

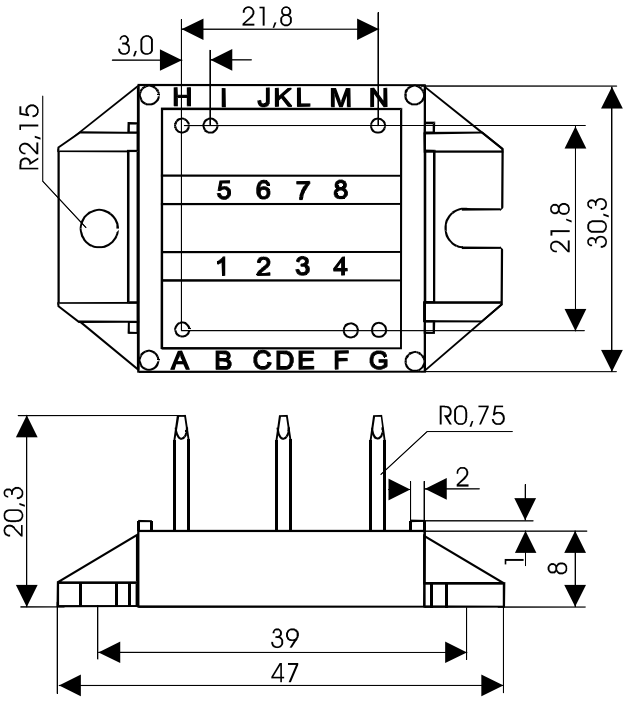

IXYS reserve the right to change limits, conditions and dimensions.
© 2002 IXYS All rights reserved