Excellent Integrated System Limited

Stocking Distributor

Click to view price, real time Inventory, Delivery & Lifecycle Information:

Vishay Semiconductor/Opto Division
K827PH

For any questions, you can email us directly:
sales@integrated-circuit.com

K827PH, K847PH

Vishay Semiconductors

Optocoupler, Phototransistor Output

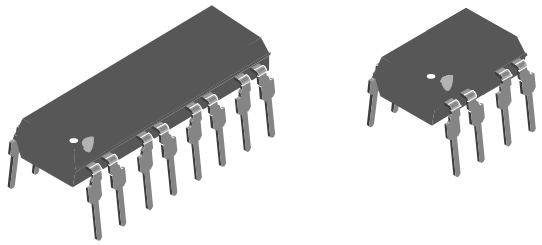

17203-6

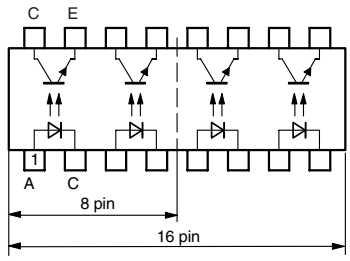

17203-7

FEATURES

- DC isolation test voltage 5000 V_{RMS}
- Compliant to RoHS directive 2002/95/EC and in accordance to WEEE 2002/96/EC

APPLICATIONS

- Programmable logic controllers
- Modems
- Answering machines
- General applications

AGENCY APPROVALS

- UL1577, file no. E57244 system code H, double protection
- cUL tested to CSA 22.2 bulletin 5A, UL1577, file no. E52744

DESCRIPTION

In the K827PH, K847PH parts each channel consist of a phototransistor optically coupled to a gallium arsenide infrared-emitting diode in a 8 pin (dual); 16 pin (quad) plastic dual inline package.

ORDER INFORMATION	
PART	**REMARKS**
K827PH	CTR 50 % to 600 %, DIP-8
K847PH	CTR 50 % to 600 %, DIP-16

Note

K827PH and K847PH are marked as K827P and K847P respectively.

ABSOLUTE MAXIMUM RATINGS [1] (T_{amb} = 25 °C, unless otherwise specified)				
PARAMETER	**TEST CONDITION**	**SYMBOL**	**VALUE**	**UNIT**
INPUT				
Reverse voltage		V_R	6	V
Forward current		I_F	60	mA
Forward surge current	$t_P \leq 10$ µs	I_{FSM}	1.5	A
Power dissipation		P_{diss}	100	mW
Junction temperature		T_j	125	°C
OUTPUT				
Collector emitter voltage		V_{CEO}	70	V
Emitter collector voltage		V_{ECO}	7	V
Collector current		I_C	50	mA
Collector peak current	$t_p/T = 0.5$, $t_p \leq 10$ ms	I_{CM}	100	mA
Power dissipation		P_{diss}	150	mW
Junction temperature		T_j	125	°C

K827PH, K847PH

Vishay Semiconductors Optocoupler, Phototransistor Output

ABSOLUTE MAXIMUM RATINGS [1] (T_{amb} = 25 °C, unless otherwise specified)				
PARAMETER	**TEST CONDITION**	**SYMBOL**	**VALUE**	**UNIT**
COUPLER				
AC isolation test voltage (RMS)	t = 1 min	V_{ISO}	5000	V_{RMS}
Total power dissipation		P_{tot}	250	mW
Operating ambient temperature range		T_{amb}	- 40 to + 100	°C
Storage temperature range		T_{stg}	- 55 to + 125	°C
Soldering temperature [2]	2 mm from case, t ≤ 10 s	T_{sld}	260	°C

Notes

(1) Stresses in excess of the absolute maximum ratings can cause permanent damage to the device. Functional operation of the device is not implied at these or any other conditions in excess of those given in the operational sections of this document. Exposure to absolute maximum ratings for extended periods of the time can adversely affect reliability.

(2) Refer to wave profile for soldering conditions for through hole devices.

ELECTRICAL CHARACTERISTICS [1] (T_{amb} = 25 °C, unless otherwise specified)						
PARAMETER	**TEST CONDITION**	**SYMBOL**	**MIN.**	**TYP.**	**MAX.**	**UNIT**
INPUT						
Forward voltage	I_F = 50 mA	V_F		1.25	1.6	V
Junction capacitance	V_R = 0 V, f = 1 MHz	C_j		50		pF
OUTPUT						
Collector emitter voltage	I_C = 100 µA	V_{CEO}	70			V
Emitter collector voltage	I_E = 100 µA	V_{ECO}	7			V
Collector dark current	V_{CE} = 20 V, I_F = 0, E = 0	I_{CEO}			100	nA
COUPLER						
Collector emitter saturation voltage	I_F = 10 mA, I_C = 1 mA	V_{CEsat}			0.3	V
Cut-off frequency	I_F = 10 mA, V_{CE} = 5 V, R_L = 100 Ω	f_c		100		kHz
Coupling capacitance	f = 1 MHz	C_k		0.3		pF

Note

(1) Minimum and maximum values are testing requirements. Typical values are characteristics of the device and are the result of engineering evaluation. Typical values are for information only and are not part of the testing requirements.

CURRENT TRANSFER RATIO							
PARAMETER	**TEST CONDITION**	**PART**	**SYMBOL**	**MIN.**	**TYP.**	**MAX.**	**UNIT**
I_C/I_F	V_{CE} = 5 V, I_F = 5 mA	K827PH	CTR	50		600	%
		K847PH	CTR	50		600	%

SWITCHING CHARACTERISTICS						
PARAMETER	TEST CONDITION	SYMBOL	MIN.	TYP.	MAX.	UNIT
Delay time	V_S = 5 V, I_C = 2 mA, R_L = 100 Ω (see figure 1)	t_d		3		µs
Rise time	V_S = 5 V, I_C = 2 mA, R_L = 100 Ω (see figure 1)	t_r		3		µs
Fall time	V_S = 5 V, I_C = 2 mA, R_L = 100 Ω (see figure 1)	t_f		4.7		µs
Storage time	V_S = 5 V, I_C = 2 mA, R_L = 100 Ω (see figure 1)	t_s		0.3		µs
Turn-on time	V_S = 5 V, I_C = 2 mA, R_L = 100 Ω (see figure 1)	t_{on}		6		µs
Turn-off time	V_S = 5 V, I_C = 2 mA, R_L = 100 Ω (see figure 1)	t_{off}		5		µs
Turn-on time	V_S = 5 V, I_F = 10 mA, R_L = 1 kΩ (see figure 2)	t_{on}		9		µs
Turn-off time	V_S = 5 V, I_F = 10 mA, R_L = 1 kΩ (see figure 2)	t_{off}		18		µs

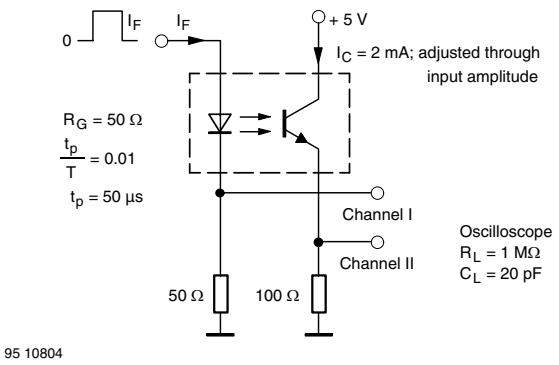

Fig. 1 - Test Circuit, Non-Saturated Operation

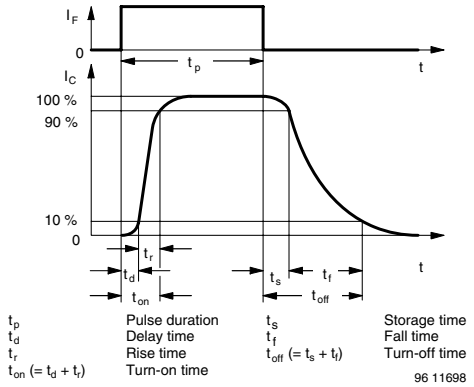

Fig. 3 - Switching Times

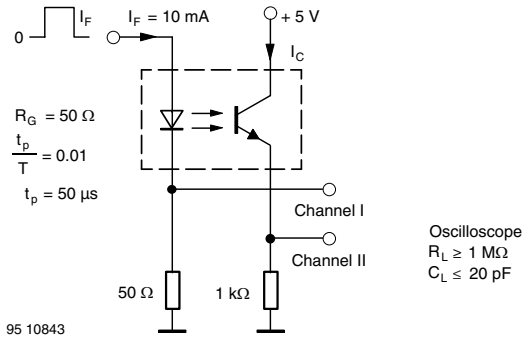

Fig. 2 - Test Circuit, Saturated Operation

TYPICAL CHARACTERISTICS (T_{amb} = 25 °C, unless otherwise specified)

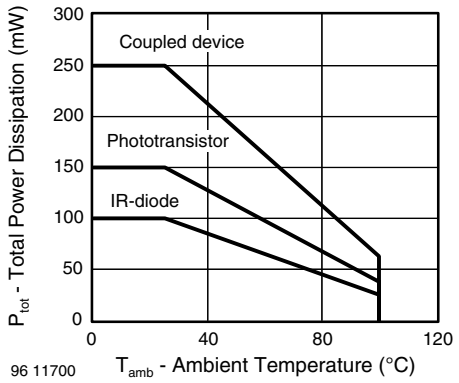

Fig. 4 - Total Power Dissipation vs. Ambient Temperature

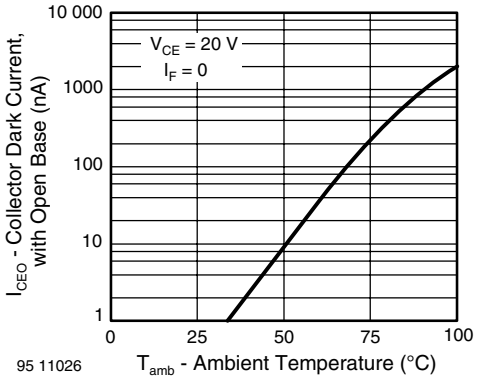

Fig. 7 - Collector Dark Current vs. Ambient Temperature

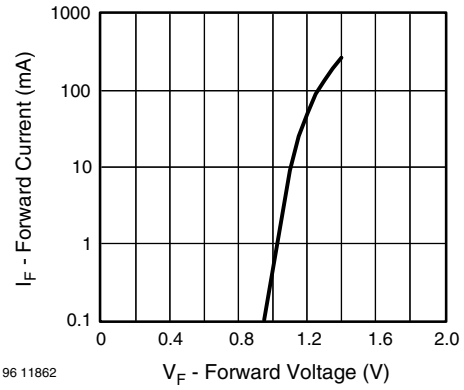

Fig. 5 - Forward Current vs. Forward Voltage

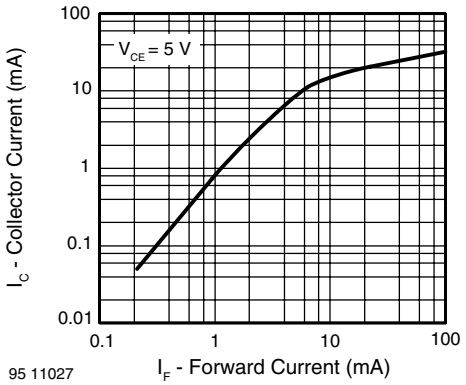

Fig. 8 - Collector Current vs. Forward Current

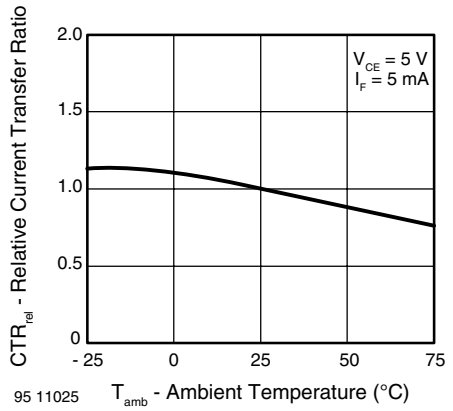

Fig. 6 - Relative Current Transfer Ratio vs. Ambient Temperature

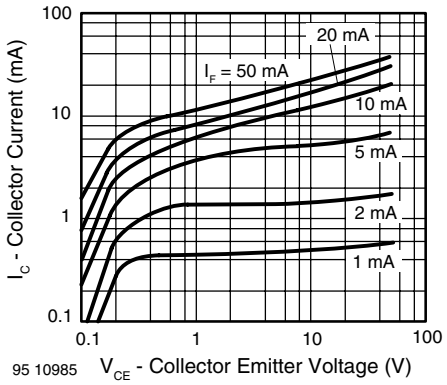

Fig. 9 - Collector Current vs. Collector Emitter Voltage

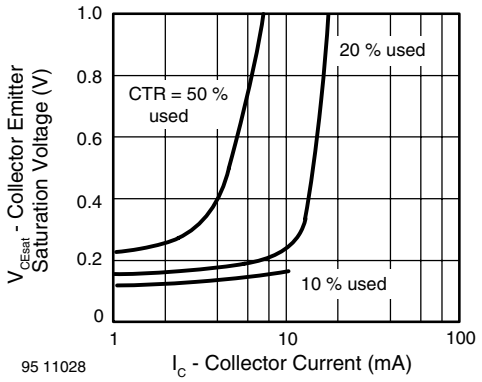

Fig. 10 - Collector Emitter Saturation Voltage vs. Collector Current

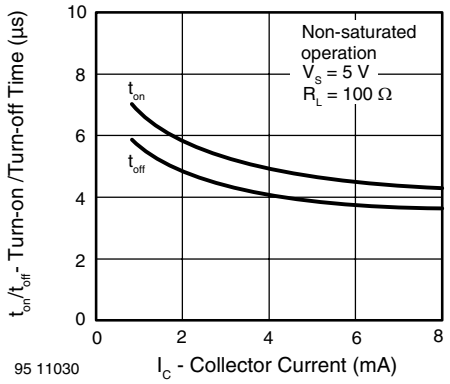

Fig. 13 - Turn-on/off Time vs. Collector Current

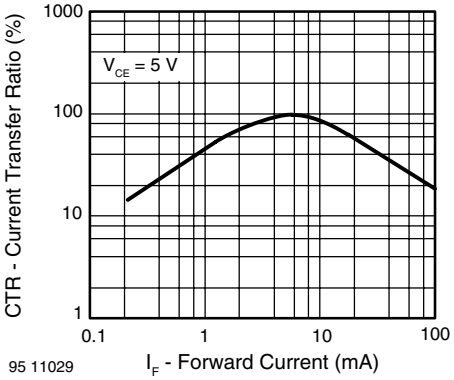

Fig. 11 - Current Transfer Ratio vs. Forward Current

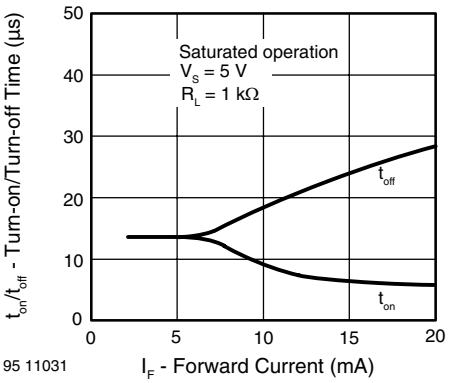

Fig. 12 - Turn-on/Turn-off Time vs. Forward Current

K827PH, K847PH

Vishay Semiconductors Optocoupler, Phototransistor Output

PACKAGE DIMENSIONS in millimeters

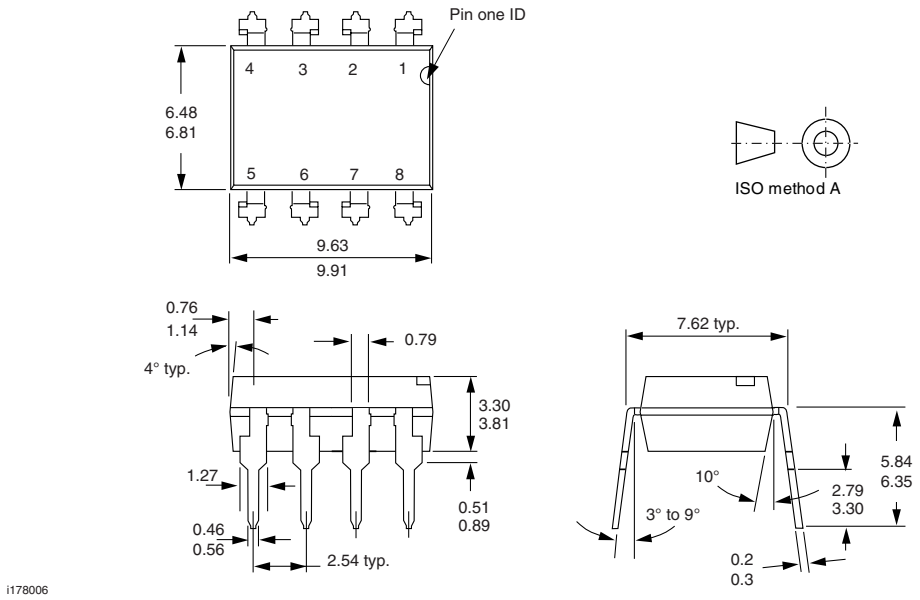

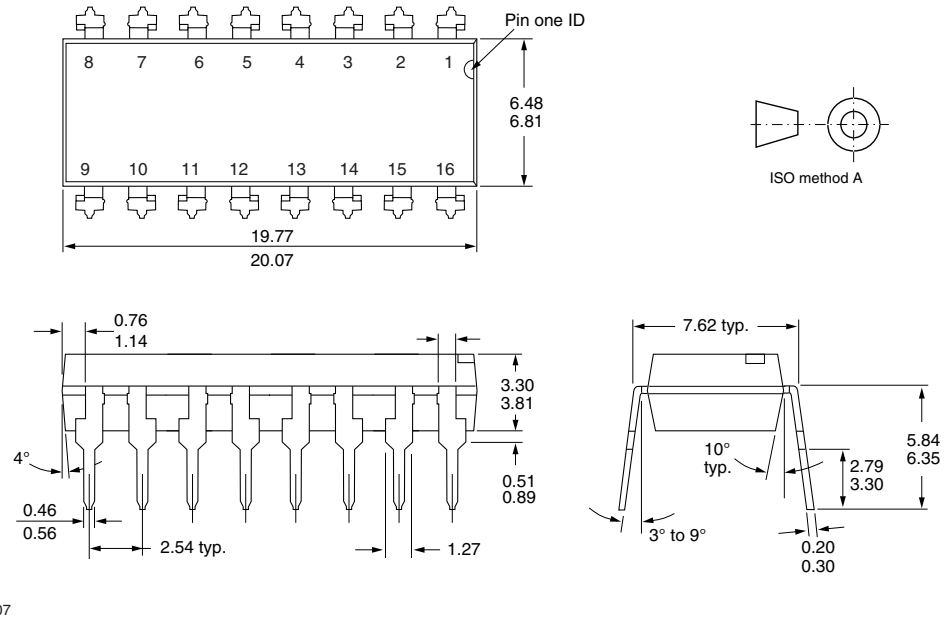

PACKAGE MARKING

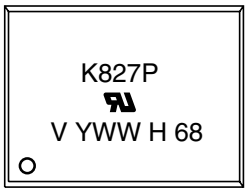

21764-50

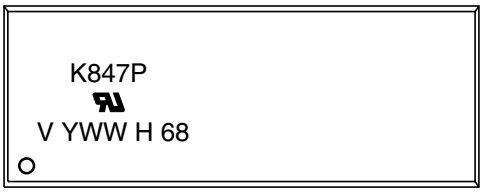

21764-51

Disclaimer

ALL PRODUCT, PRODUCT SPECIFICATIONS AND DATA ARE SUBJECT TO CHANGE WITHOUT NOTICE TO IMPROVE RELIABILITY, FUNCTION OR DESIGN OR OTHERWISE.

Vishay Intertechnology, Inc., its affiliates, agents, and employees, and all persons acting on its or their behalf (collectively, “Vishay”), disclaim any and all liability for any errors, inaccuracies or incompleteness contained in any datasheet or in any other disclosure relating to any product.

Vishay makes no warranty, representation or guarantee regarding the suitability of the products for any particular purpose or the continuing production of any product. To the maximum extent permitted by applicable law, Vishay disclaims (i) any and all liability arising out of the application or use of any product, (ii) any and all liability, including without limitation special, consequential or incidental damages, and (iii) any and all implied warranties, including warranties of fitness for particular purpose, non-infringement and merchantability.

Statements regarding the suitability of products for certain types of applications are based on Vishay’s knowledge of typical requirements that are often placed on Vishay products in generic applications. Such statements are not binding statements about the suitability of products for a particular application. It is the customer’s responsibility to validate that a particular product with the properties described in the product specification is suitable for use in a particular application. Parameters provided in datasheets and / or specifications may vary in different applications and performance may vary over time. All operating parameters, including typical parameters, must be validated for each customer application by the customer’s technical experts. Product specifications do not expand or otherwise modify Vishay’s terms and conditions of purchase, including but not limited to the warranty expressed therein.

Except as expressly indicated in writing, Vishay products are not designed for use in medical, life-saving, or life-sustaining applications or for any other application in which the failure of the Vishay product could result in personal injury or death. Customers using or selling Vishay products not expressly indicated for use in such applications do so at their own risk. Please contact authorized Vishay personnel to obtain written terms and conditions regarding products designed for such applications.

No license, express or implied, by estoppel or otherwise, to any intellectual property rights is granted by this document or by any conduct of Vishay. Product names and markings noted herein may be trademarks of their respective owners.