Excellent Integrated System Limited

Stocking Distributor

Click to view price, real time Inventory, Delivery & Lifecycle Information:

Maxim Integrated
MAX11504CUB+

For any questions, you can email us directly:
sales@integrated-circuit.com

Distributor of Maxim Integrated: Excellent Integrated System Limited
Datasheet of MAX11504CUB+ - IC STD VIDEO FILTER 4CH 10UMAX
Contact us: sales@integrated-circuit.com Website: www.integrated-circuit.com

19-1057; Rev 0; 11/07

EVALUATION KIT AVAILABLE

Four-Channel, Standard-Definition Video Filters

MAX11504/MAX11505

General Description

The MAX11504/MAX11505 integrated filters offer four channels of 5th order filters for standard-definition video and include +6dB output buffers on each channel. These video filters are ideal for anti-aliasing and DAC smoothing in applications such as set-top boxes, security systems, digital video recorders (DVRs), DVD players, and personal video recorders.

The MAX11504/MAX11505 video inputs feature a transparent clamp compatible with AC- and DC-coupled input signals and allow DAC outputs to be directly coupled. The 5th order filters provide a bandwidth of 8.6MHz (typical). The MAX11504 offers a flat passband response on all channels. The MAX11505 offers a 0.8dB peaking passband response on Channel 1, resulting in a bandwidth of 8.9MHz (typical) and a flat passband response on all other channels.

Each channel includes an output buffer with a gain of +6dB capable of driving a full $2V_{P-P}$ video signal into two standard 150Ω (75Ω back terminated) video loads. The buffers drive either AC- or DC-coupled loads and assure a blanking level below 1V after the back-match resistor.

The MAX11504/MAX11505 operate from a single +5V supply and are available in the 0°C to +70°C commercial temperature range. These devices are available in small 10-pin µMAX® packages.

Applications

Set-Top Box Receivers
Digital Video Recorders (DVRs)
Security Video Systems
SDTV
DVD Players
Personal Video Recorders
Video On-Demand

µMAX is a registered trademark of Maxim Integrated Products, Inc.

Pin Configuration

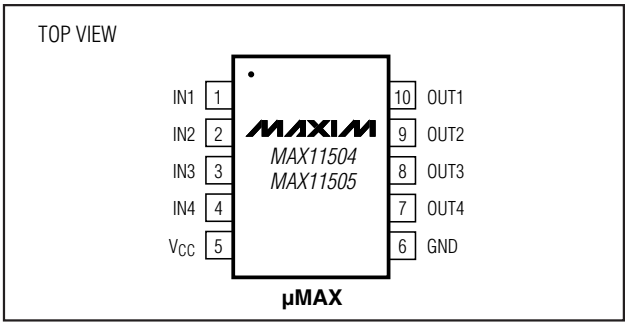

Features

- Four-Channel 5th Order Filter for Standard-Definition Video
- +6dB Output Buffers
- Transparent Input Clamp
- AC- or DC-Coupled Inputs
- AC- or DC-Coupled Outputs
- Output Buffers Can Drive Two Standard 150Ω Video Loads
- 12kV HBM ESD Protection on Outputs
- Flat Passband Response (MAX11504)
- 0.8dB Peaking Passband Response on Channel 1 (MAX11505)
- Single +5V Power Supply
- Small 10-Pin µMAX Package

Ordering Information

PART	PIN-PACKAGE	PACKAGE CODE	FREQUENCY RESPONSE
MAX11504CUB+	10 µMAX	U10+2	Flat
MAX11505CUB+	10 µMAX	U10+2	HF Boost On Channel 1

Note: *All devices are specified over the 0°C to +70°C commercial temperature range.*

Simplified Block Diagram

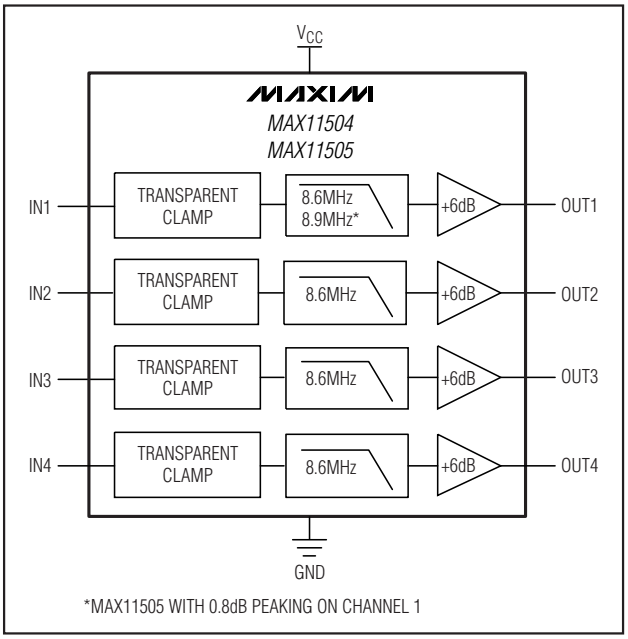

For pricing, delivery, and ordering information, please contact Maxim Direct at 1-888-629-4642, or visit Maxim's website at www.maxim-ic.com.

Four-Channel, Standard-Definition Video Filters

ABSOLUTE MAXIMUM RATINGS

V_{CC} to GND .....-0.3V to +6V
All other pins to GND ..-0.3V to the lower of (V_{CC} + 0.3V) and +6V
Continuous Power Dissipation (T_A = +70°C)
10-Pin µMAX (derate 8.8mW/°C above +70°C).....707.3mW
Maximum Current into Any Pin except V_{CC} and GND.....±50mA

Operating Temperature Range
MAX1150_CUB .....0°C to +70°C
Storage Temperature Range .....-65°C to +150°C
Junction Temperature.....+150°C
Lead temperature (soldering, 10s) .....+300°C

Stresses beyond those listed under "Absolute Maximum Ratings" may cause permanent damage to the device. These are stress ratings only, and functional operation of the device at these or any other conditions beyond those indicated in the operational sections of the specifications is not implied. Exposure to absolute maximum rating conditions for extended periods may affect device reliability.

ELECTRICAL CHARACTERISTICS

(V_{CC} = +5V, R_{LOAD} = 150Ω to GND, C_{IN} = 0.1µF, T_A = 0°C to +70°C. All frequency response is relative to 100kHz.)

PARAMETER	SYMBOL	CONDITIONS	MIN	TYP	MAX	UNIT
-1dB Bandwidth	f_{1dB}	MAX11504	4.5	7.2		MHz
		MAX11505, Channel 1	5.0	7.8		
-3dB Bandwidth	f_{3dB}	MAX11504		8.6		MHz
		MAX11505, Channel 1		8.9		
Stopband Attenuation	A_{SB}	f = 27MHz		50		dB
Low-Frequency Gain	A_V		5.5	6.0	6.5	dB
Low-Frequency Gain Matching	$A_{V(MATCH)}$			0.02		dB
Input Voltage Range	V_{IN}	Referenced to GND if DC-coupled		1.4		V
Differential Gain	dG	All channels		0.1		%
Differential Phase	dϕ	All channels		0.3		degrees
Total Harmonic Distortion	THD	V_{OUT} = 1.8V_{P-P}, f = 1MHz (All channels)		0.1		%
Channel-to-Channel Crosstalk	X_{TALK}	f = 1MHz		-70		dB
Signal-to-Noise Ratio	SNR	NTC-7 weighting, 100kHz, 4.2MHz		80		dB
Propagation Delay	t_{pd}	f = 4.5MHz		76		ns
Power-Supply Rejection Ratio	PSRR	DC (all channels)		70		dB
Supply-Voltage Range	V_{CC}		4.75	5	5.25	V
Supply Current	I_{CC}	No load		24	35	mA

Four-Channel, Standard-Definition Video Filters

Typical Operating Characteristics

(V_{CC} = 5V, R_L = 150Ω to GND, T_A = +25°C)

MAX11504 FREQUENCY RESPONSE

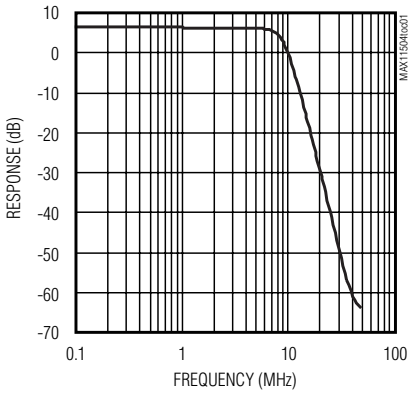

MAX11504 PASSBAND RESPONSE

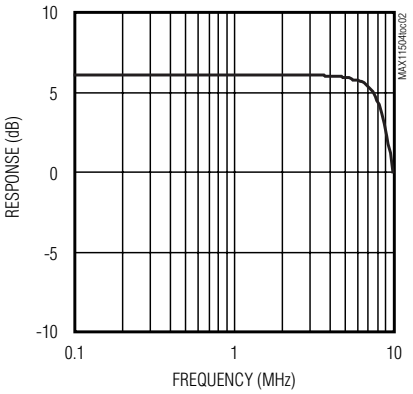

MAX11504 GROUP DELAY vs. FREQUENCY

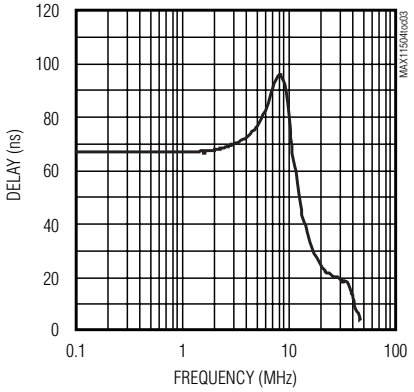

MAX11504 DIFFERENTIAL GAIN, NTSC

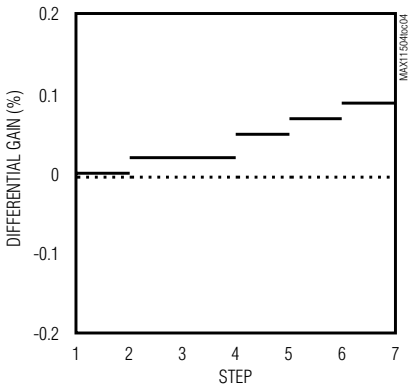

MAX11504 DIFFERENTIAL PHASE, NTSC

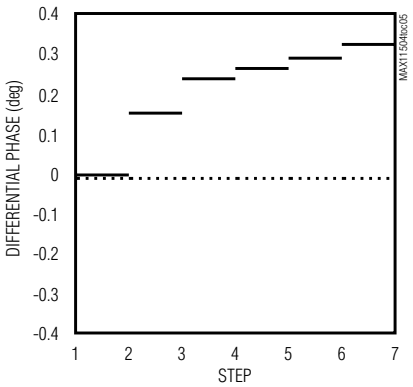

MAX11504 2T RESPONSE

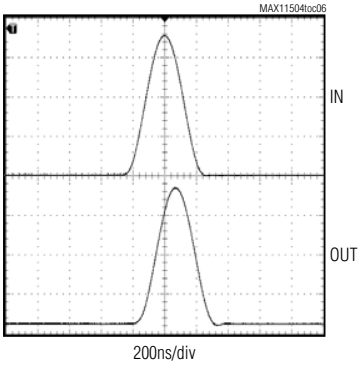

MAX11504 12.5T RESPONSE

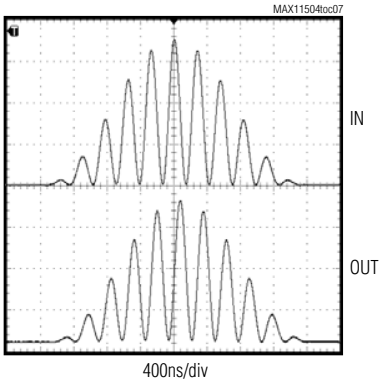

MAX11504 MULTIBURST RESPONSE

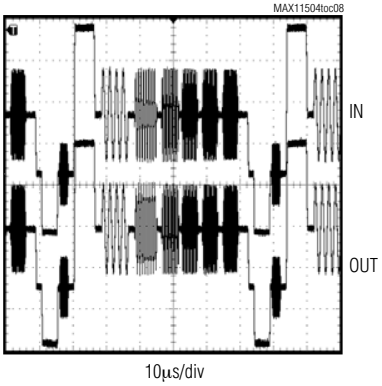

Four-Channel, Standard-Definition Video Filters

Typical Operating Characteristics (continued)

(V_{CC} = 5V, R_L = 150Ω to GND, T_A = +25°C)

MAX11505 FREQUENCY RESPONSE

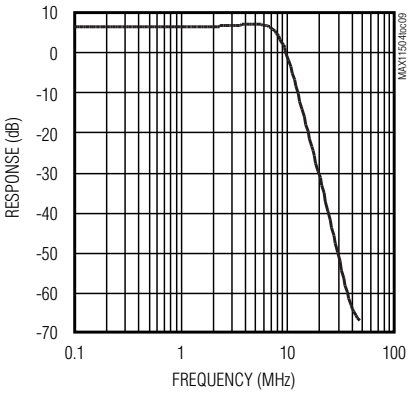

MAX11505 PASSBAND RESPONSE

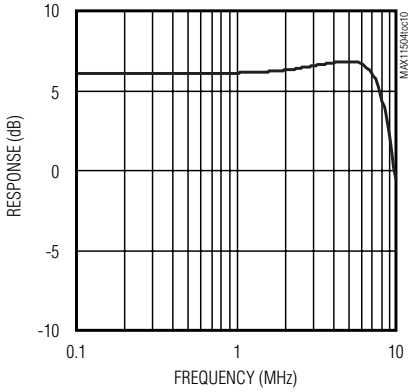

MAX11505 GROUP DELAY vs. FREQUENCY

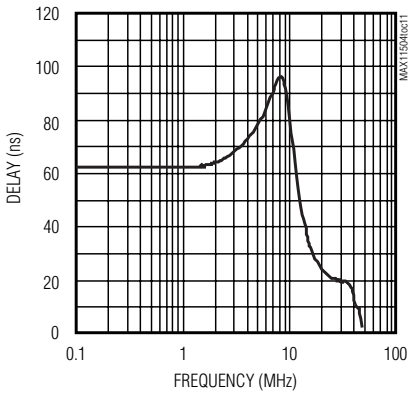

MAX11505 DIFFERENTIAL GAIN, NTSC

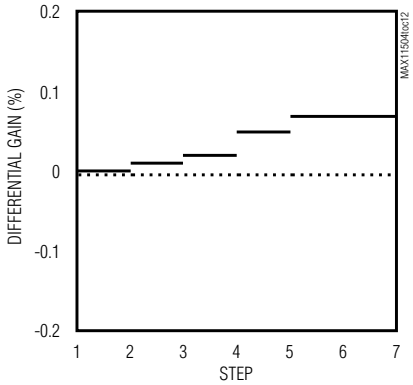

MAX11505 DIFFERENTIAL PHASE, NTSC

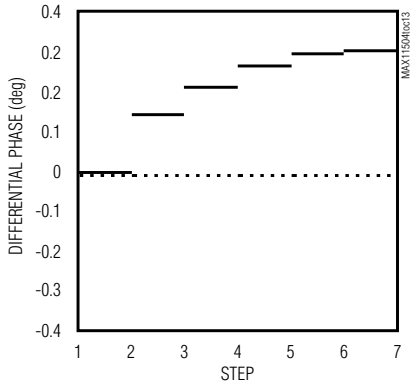

MAX11505 2T RESPONSE

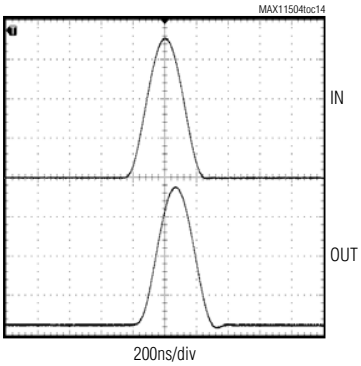

MAX11505 12.5T RESPONSE

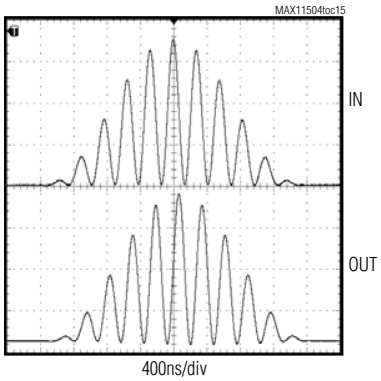

MAX11505 MULTIBURST RESPONSE

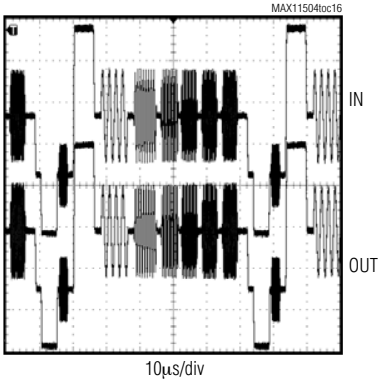

Distributor of Maxim Integrated: Excellent Integrated System Limited
Datasheet of MAX11504CUB+ - IC STD VIDEO FILTER 4CH 10UMAX
Contact us: sales@integrated-circuit.com Website: www.integrated-circuit.com

Four-Channel, Standard-Definition Video Filters

Pin Description

PIN	NAME	FUNCTION
1	IN1	Video Input Channel 1. The MAX11505 provides 0.8dB passband boost at high frequency.
2	IN2	Video Input Channel 2
3	IN3	Video Input Channel 3
4	IN4	Video Input Channel 4
5	V_{CC}	Power Supply. Bypass to ground with 0.1µF and 1µF capacitors.
6	GND	Ground
7	OUT4	Video Output Channel 4
8	OUT3	Video Output Channel 3
9	OUT2	Video Output Channel 2
10	OUT1	Video Output Channel 1. The MAX11505 provides 0.8dB passband boost at high frequency.

Detailed Description

Each channel of the MAX11504/MAX11505 contains a transparent input clamp, a 5th order lowpass filter, and an output amplifier with +6dB gain (see the *Functional Diagrams and Typical Operating Circuits*). The 5th order lowpass filters provide a bandwidth of 8.6MHz (typical). The MAX11504 provides a flat passband response. The MAX11505 features a 0.8dB high-frequency boost on Channel 1 to help with system rolloff (for CVBS signals) and a flat passband response on all other channels. Within the passband, each channel amplifies the signal by two and adds 280mV of offset.

$$V_{OUT} = (2 \times V_{IN}) + 0.28V$$

Typical voltage levels are shown in Figures 1 and 2.

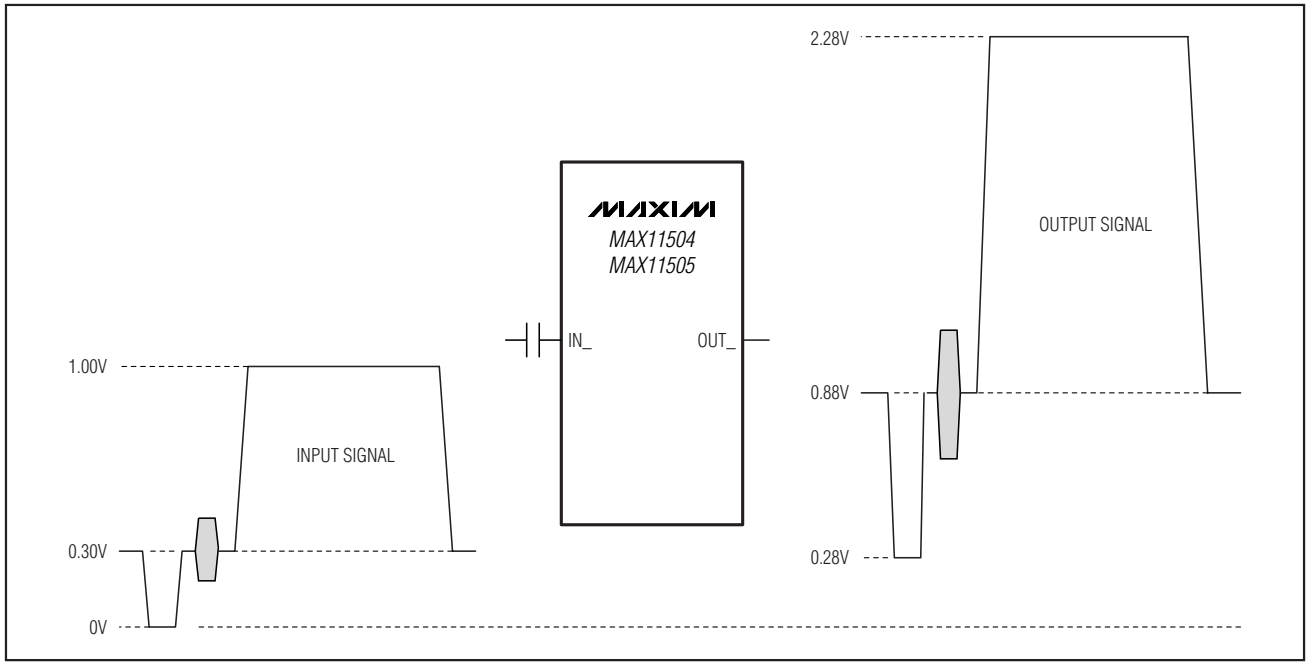

Figure 1. Typical AC-Coupled Signal

Four-Channel, Standard-Definition Video Filters

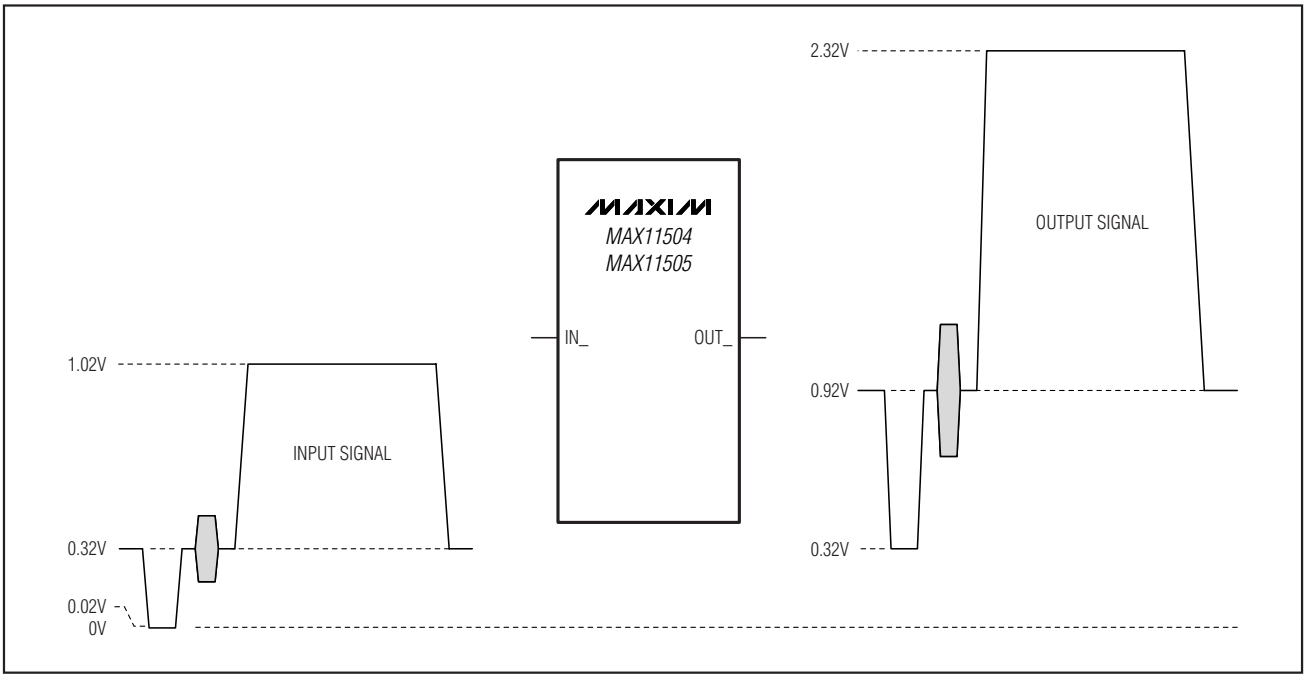

Figure 2. Typical DC-Coupled Signal

Transparent Clamps

All inputs feature transparent clamps that allow either AC or DC input coupling. The clamp remains inactive while the input signal is above ground, offering true DC input coupling. If the signal goes below ground, as occurs when it is AC-coupled, the clamp sets the sync tip slightly below the ground level.

Input Coupling

The choice of AC- or DC-coupling the input depends on the video source. Many DACs provide a current output and are terminated to ground with a resistor; such signals are conveniently DC-coupled. Use AC-coupling when the DC level of the video signal is unknown or outside the specified input range of the MAX11504/MAX11505, such as SCART or V_{CC}-terminated DAC outputs.

DC-Coupled Inputs

If the input is DC-coupled, the input voltage must remain above zero but not exceed the maximum input voltage of 1.4V (typical).

AC-Coupled Inputs

If the input is AC-coupled, the transparent clamps are active and set the lowest point of the signal at ground. This is appropriate for unipolar signals such as Y, R, G, or B with or without sync pulse (Figure 3).

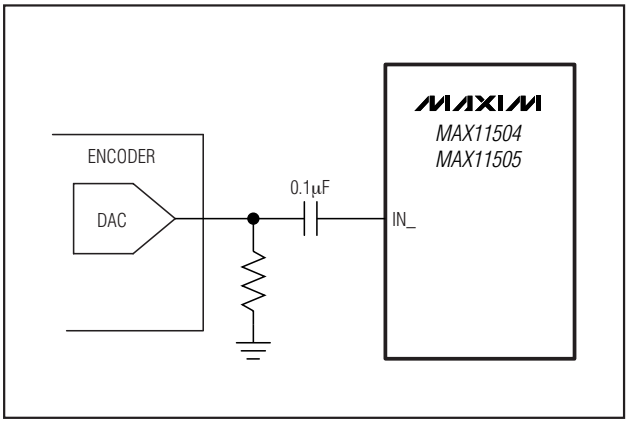

Figure 3. Simple AC-Coupling for Unipolar Signals (Y, R, G, B)

For bipolar signals such as C, Pb, and Pr, bias the AC-coupled inputs to a fixed DC voltage, typically 0.59V, to ensure that the transparent clamp remains off. A suitable network is shown in Figure 4. Determine the bias voltage using:

$$V_B = \frac{R2}{R1+R2}(V_{CC} - I_L \times R1)$$

where I_L = the input leakage current (typically 0.5µA).

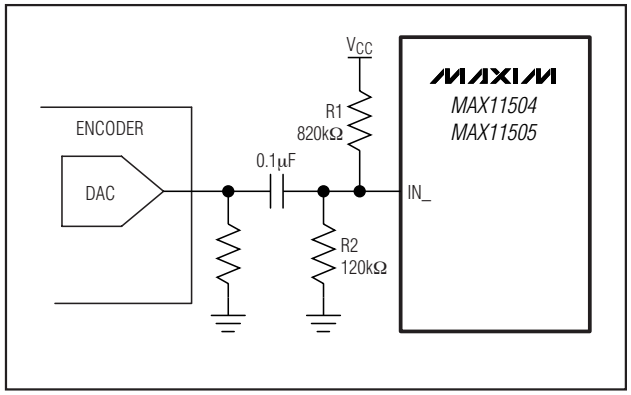

Figure 4. AC-Coupling for Bipolar Signals (C, Pb, Pr)

Standard-Definition Filters

The MAX11504/MAX11505 filters are optimized to deliver a flat passband along with high stopband attenuation. The filter characteristic has been chosen to provide an excellent time domain response with low overshoot. The typical -3dB frequency of 8.6MHz guarantees minimal attenuation in the passband while at the same time offering a 27MHz attenuation of typically -50dB. Channel 1 of the MAX11505 has 0.8dB of high-frequency boost and a -3dB frequency of 8.9MHz.

Output Buffer

The MAX11504/MAX11505 feature output buffers with +6dB gain that drive two standard 150Ω video loads. A typical load (Figure 5a) is a 75Ω back-match resistor, an optional 220µF or larger coupling capacitor, and a 75Ω termination resistor. The MAX11504/MAX11505 clamp the signal, forcing the blanking level to less than 1V at the termination resistor. This allows driving video loads to meet digital TV specifications without the need for costly AC-coupling capacitors. When driving two parallel loads per output (Figure 5b), thermal considerations must be taken into account, especially for DC-coupled outputs (see the *Junction Temperature Calculations* section.)

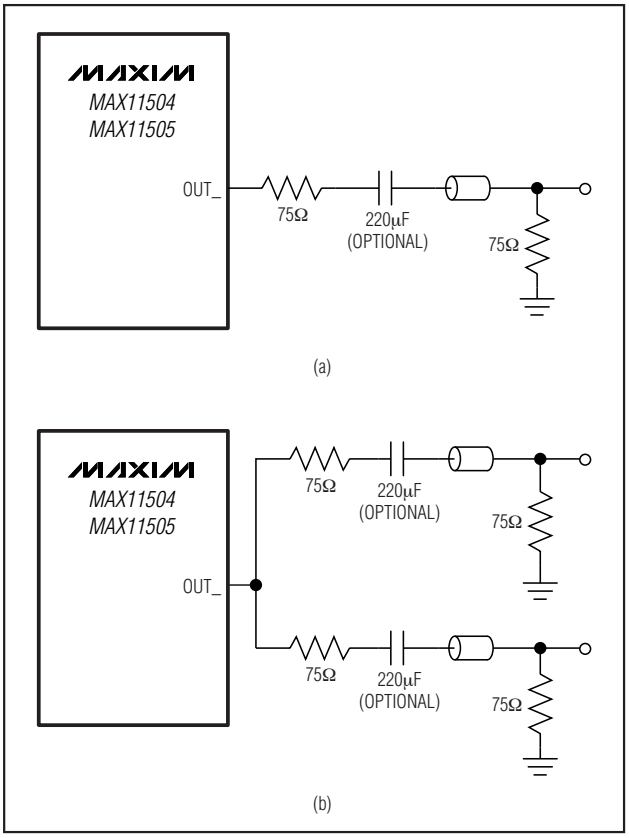

Figure 5. Typical Output Loads

Four-Channel, Standard-Definition Video Filters

Applications Information

Output Configuration

The MAX11504/MAX11505 outputs may be either DC- or AC-coupled. If AC-coupled, choose a capacitor that passes the lowest frequency content of the video signal, and keep the line-time distortion within desired limits. The capacitor value is a function of the input leakage and impedance of the circuit being driven. Common industry practice is to use a 220µF or larger coupling capacitor. If any or all outputs are driving two parallel loads, see the *Junction Temperature Calculations* section.

The MAX11504/MAX11505 outputs are fully protected against short circuits either to the ground or the positive supply of the device. The short-circuit protection circuitry limits the output current to 80mA (typical) per output. Shorting more than one output simultaneously can exceed the maximum package power dissipation.

Junction Temperature Calculations

Die temperature is a function of quiescent power dissipation and the power dissipation in the output drivers. Calculate the power dissipated P_D using:

$$P_D = P_{DS} + P_{DO1} + P_{DO2} + P_{DO3} + P_{DO4}$$

where P_{DS} is the quiescent power dissipated in the die, and given by:

$$P_{DS} = V_{CC} \times I_{CC}$$

and where P_{DOn} is the power dissipated in the nth driver stage and given by:

$$P_{DOn} = \frac{(V_{CC} - V_{ORMSn}) \times V_{ORMSn}}{R_L}$$

where V_{ORMSn} is the RMS output voltage and R_L is the load resistance.

Example - Assuming these conditions:

1) Video standard = 525/60/2:1.
2) Video format = RGB with syncs on all channels.
3) Picture content = 100% white.
4) The input signal is AC-coupled.
5) The output signal is DC-coupled.
6) V_{CC} = 5.0V.
7) I_{CC} = 24mA.

A sync tip exists at 280mV and peak white exists at 2.28V. The RMS voltage will be approximately 1.88V on each output (80% of the peak-peak voltage, plus the offset) giving:

$$P_{DS} = 5 \times 0.024 = 0.12W$$

$$P_{DOn} = \frac{(5 - 1.88) \times 1.88}{75} = 0.078W$$

and

$$P_D = 0.12 + 0.078 + 0.078 + 0.078 + 0.078 = 0.432W$$

The junction temperature is given by:

$$T_J = T_A + (R_{\theta JA} \times P_D)$$

where T_J = junction temperature, T_A = ambient temperature (assume +70°C) and $R_{\theta JA}$ = thermal resistance junction to ambient.

From the *Absolute Maximum Ratings* section of the data sheet, the derating factor is 8.8mW/°C above +70°C. $R_{\theta JA}$ = 1/(derating factor) = 1/(8.8mW/°C) = 113°C/W.

Therefore:

$$T_J = 70 + 113 \times 0.432 = +119°C$$

If there is only one video load on each output, the junction temperature lowers to:

$$T_J = +101°C$$

The above calculations assume the use of a multilayered board with extensive ground planes for high thermal efficiency. Using such a board is especially important in applications where there are two video loads on each channel.

Distributor of Maxim Integrated: Excellent Integrated System Limited
Datasheet of MAX11504CUB+ - IC STD VIDEO FILTER 4CH 10UMAX
Contact us: sales@integrated-circuit.com Website: www.integrated-circuit.com

PCB Layout Recommendations

To help with heat dissipation, connect the power and ground traces to large copper areas. Bypass V_{CC} to GND with a 0.1µF capacitor and 1.0µF capacitors. Surface-mount capacitors are recommended for their low inductance. Place traces carrying video signals appropriately to avoid mutual coupling. If inputs are AC-coupled, place the capacitors as close as possible to the device and keep the traces short to minimize parasitic capacitance and inductance.

Four-Channel, Standard-Definition Video Filters

Functional Diagrams and Typical Operating Circuits

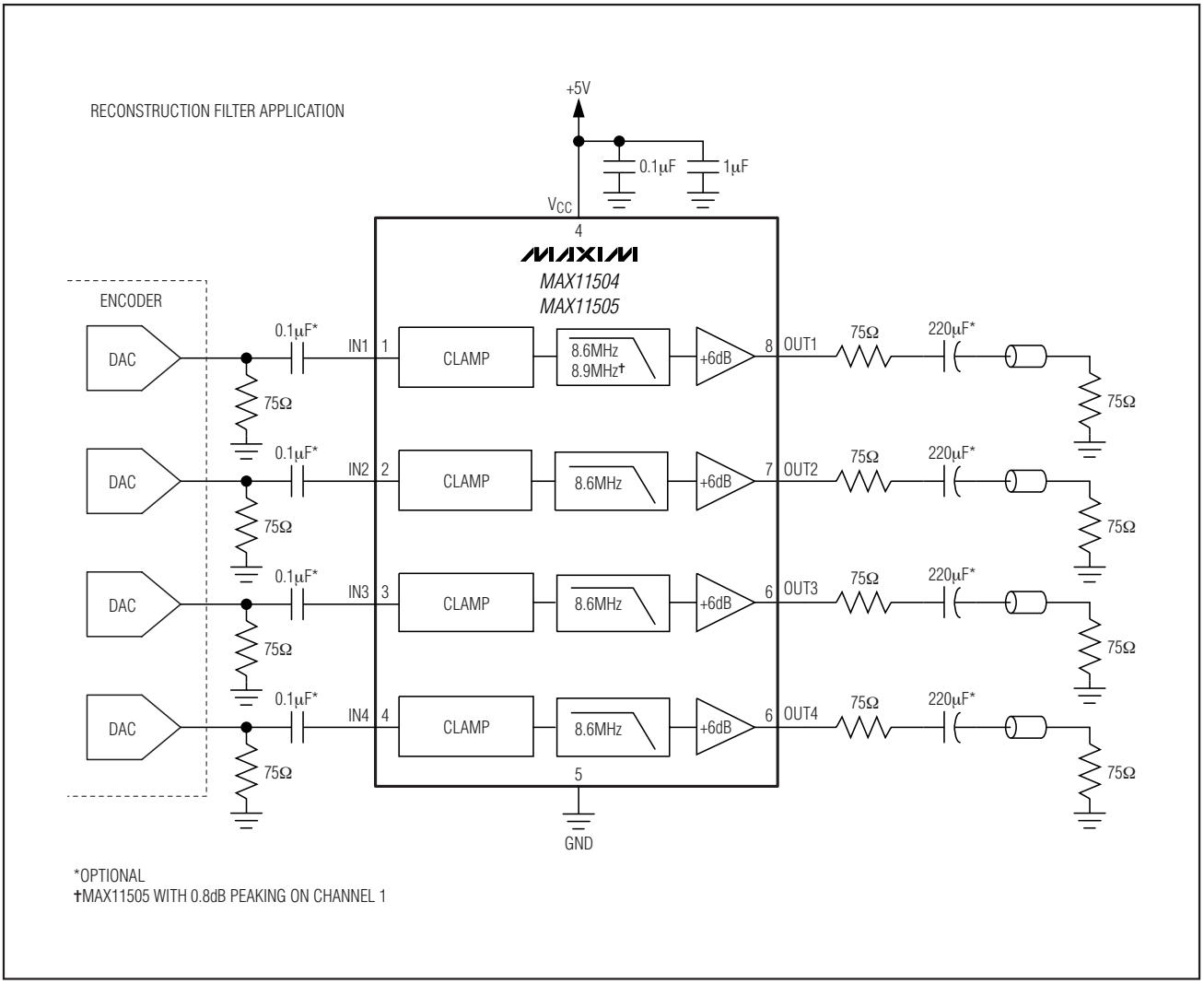

Four-Channel, Standard-Definition Video Filters

Functional Diagrams and Typical Operating Circuits (continued)

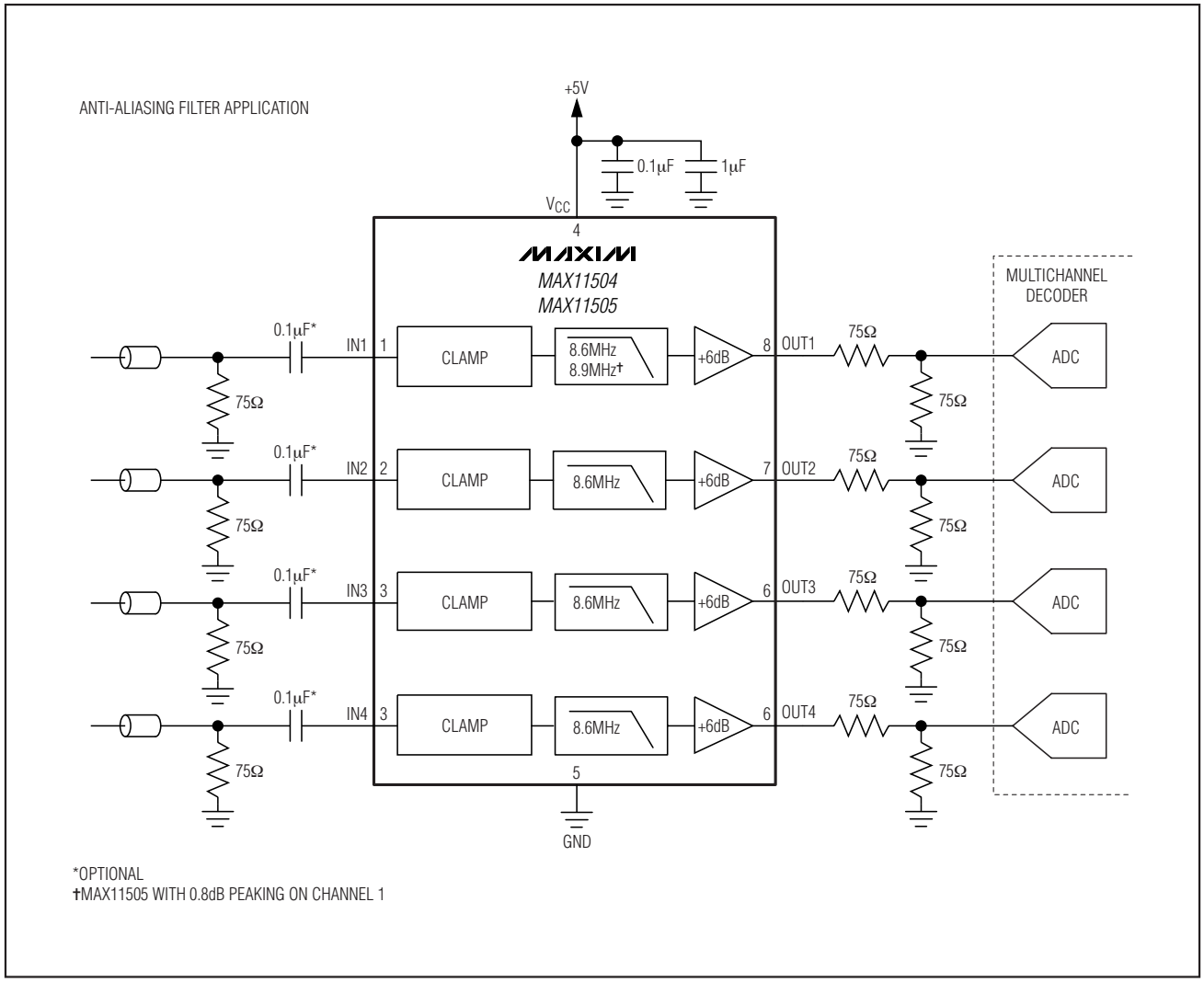

Chip Information

PROCESS: BiCMOS

Distributor of Maxim Integrated: Excellent Integrated System Limited
Datasheet of MAX11504CUB+ - IC STD VIDEO FILTER 4CH 10UMAX
Contact us: sales@integrated-circuit.com Website: www.integrated-circuit.com

Four-Channel, Standard-Definition Video Filters

Package Information

(The package drawing(s) in this data sheet may not reflect the most current specifications. For the latest package outline information go to **www.maxim-ic.com/packages**.)

10LUMAX.EPS

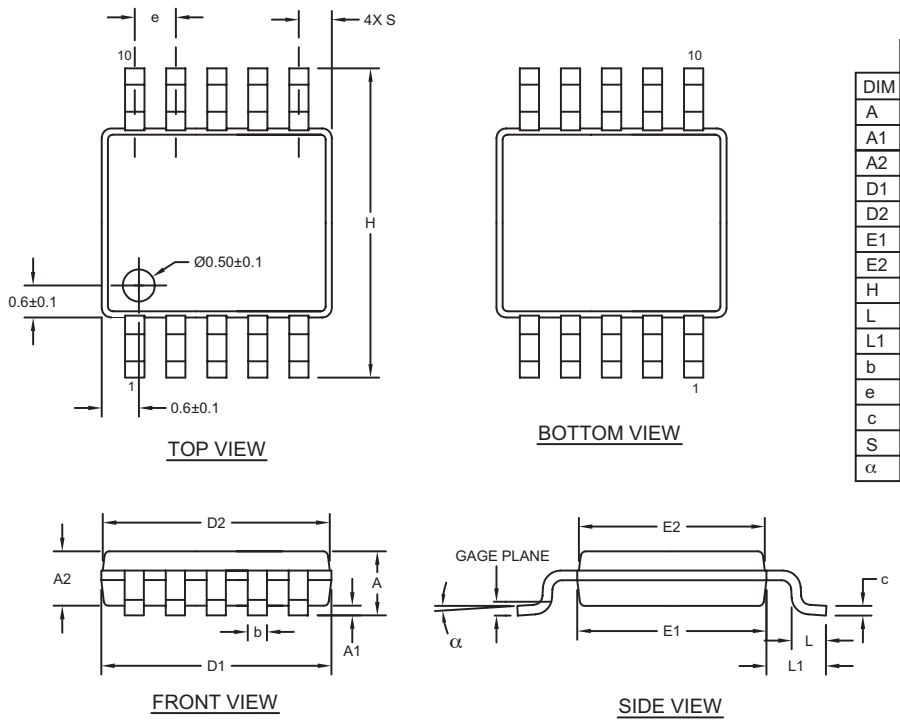

	INCHES		MILLIMETERS	
DIM	MIN	MAX	MIN	MAX
A	-	0.043	-	1.10
A1	0.002	0.006	0.05	0.15
A2	0.030	0.037	0.75	0.95
D1	0.116	0.120	2.95	3.05
D2	0.114	0.118	2.89	3.00
E1	0.116	0.120	2.95	3.05
E2	0.114	0.118	2.89	3.00
H	0.187	0.199	4.75	5.05
L	0.0157	0.0275	0.40	0.70
L1	0.037 REF		0.940 REF	
b	0.007	0.0106	0.177	0.270
e	0.0197 BSC		0.500 BSC	
c	0.0035	0.0078	0.090	0.200
S	0.0196 REF		0.498 REF	
α	0°	6°	0°	6°

NOTES:
1. D&E DO NOT INCLUDE MOLD FLASH.
2. MOLD FLASH OR PROTRUSIONS NOT TO EXCEED 0.15mm (.006").
3. CONTROLLING DIMENSION: MILLIMETERS.
4. MEETS JEDEC MO-187C-BA.

DALLAS SEMICONDUCTOR MAXIM
PROPRIETARY INFORMATION
TITLE: PACKAGE OUTLINE, 10L uMAX/uSOP
APPROVAL | DOCUMENT CONTROL NO. 21-0061 | REV. I | 1/1

Maxim cannot assume responsibility for use of any circuitry other than circuitry entirely embodied in a Maxim product. No circuit patent licenses are implied. Maxim reserves the right to change the circuitry and specifications without notice at any time.

© 2007 Maxim Integrated Products MAXIM is a registered trademark of Maxim Integrated Products, Inc.