Excellent Integrated System Limited

Stocking Distributor

Click to view price, real time Inventory, Delivery & Lifecycle Information:

E-Switch
1003P3T1B2M7QE

For any questions, you can email us directly:
sales@integrated-circuit.com

Distributor of E-Switch: Excellent Integrated System Limited
Datasheet of 1003P3T1B2M7QE - SWITCH TOGGLE 3PDT 5A 120V
Contact us: sales@integrated-circuit.com Website: www.integrated-circuit.com

SHEET OF

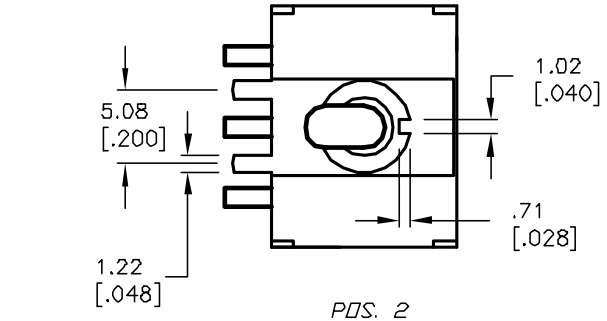

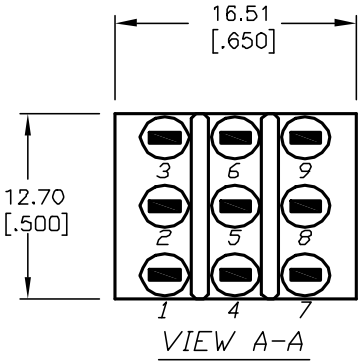

VIEW A-A

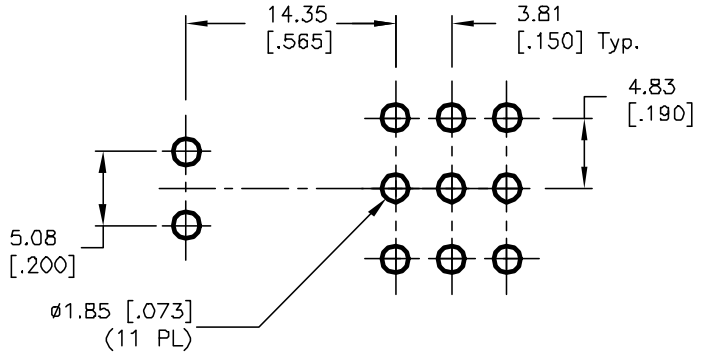

RECOMMENDED P.C.B. LAYOUT

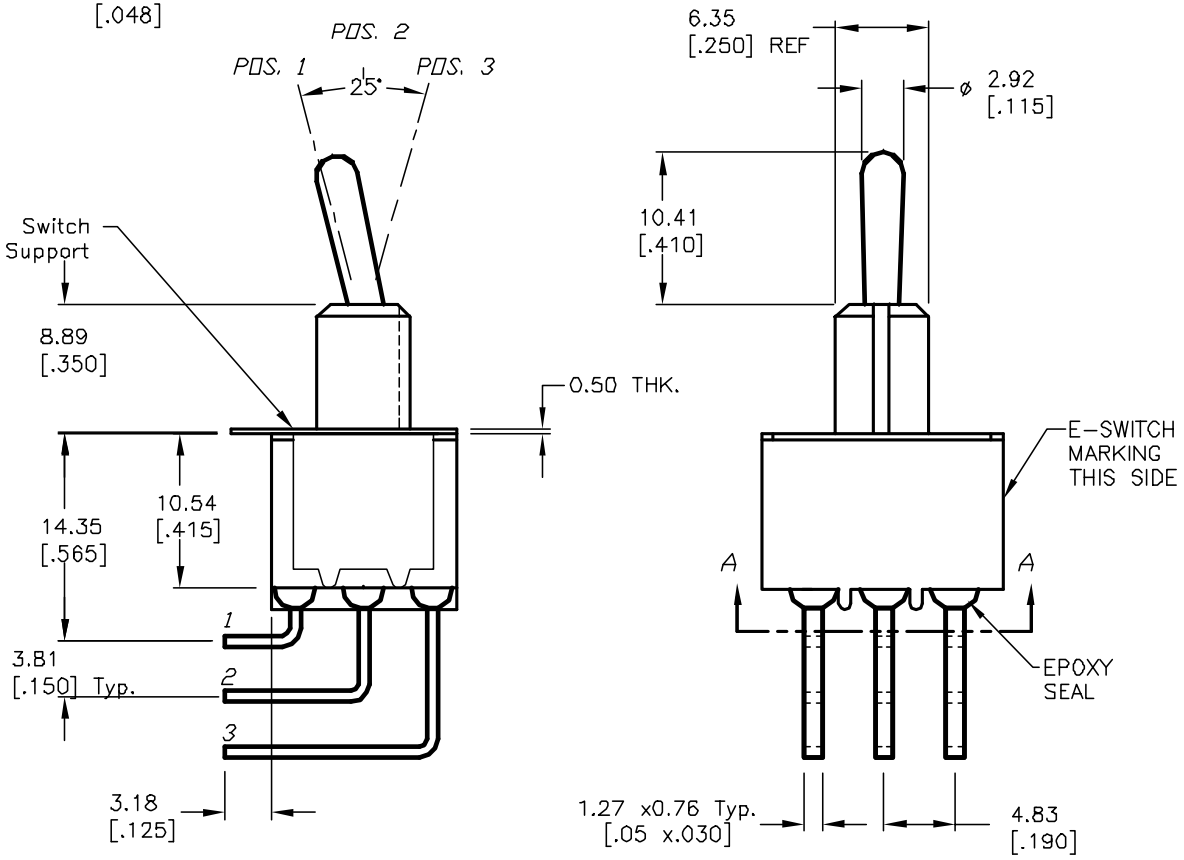

SWITCH FUNCTION		
POS. 1	POS. 2	POS. 3
	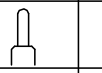	
ON	OFF	ON
2-3,5-6 8-9	OPEN	2-1,5-4 8-7

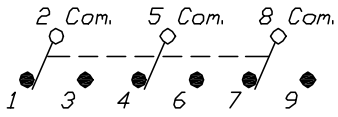

CIRCUIT: 3PDT

NOTES:

1. ALL DIMENSIONS IN MM [INCH]
2. GENERAL TOLERANCE: X.X=±0.4
   X.XX=±0.25
3. TERMINAL NUMBERS FOR REF ONLY
4. RATING: 5A @120VAC or 28VDC;
   2A @250VAC.
5. CONTACT MATERIAL:
   Copper Alloy W/SILVER Plate
6. ELECTRIC LIFE: 50,000 make-and-break cycles
   at full load.
7. INSULATION RESISTANCE: 1,000 Mega-OHM min.
8. DIELECTRIC STRENGTH: 1,000 V RMS @sea level.
9. OPERATING TEMP.: -30°C to 85°C

REV.	ECN No.	DESCRIPTION	DATE	CHKD
C	12078	REVISED AND REDRAWN	4/19/02	CJB

THE INFORMATION CONTAINED IN THIS DOCUMENT
IS PROPRIETARY TO E-SWITCH AND IS
NOT TO BE COPIED OR TRANSFERRED

E-SWITCH®

TITLE: 100 3P-3 T1 B2 M7 Q E

SCALE	DATE	DR	DWG	REV
2:1	4/19/02	CB	T135010	C