Excellent Integrated System Limited

Stocking Distributor

Click to view price, real time Inventory, Delivery & Lifecycle Information:

E-Switch
300AWSP2R1BLKM1QE

For any questions, you can email us directly:
sales@integrated-circuit.com

SHEET OF

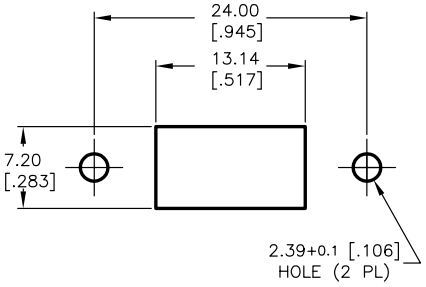

RECOMMENDED PANEL MOUNT

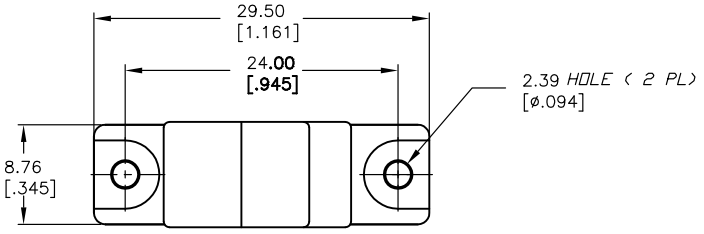

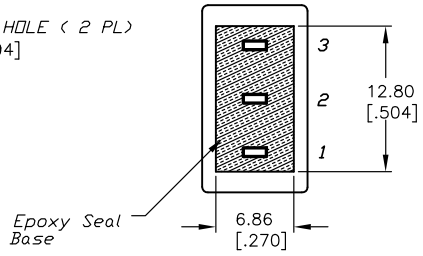

VIEW A-A

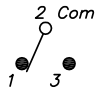

CIRCUIT: SPST

SWITCH FUNCTION		
POS. 1	POS. 2	POS. 3
ON	NONE	(ON)
2-3	OPEN	2-1

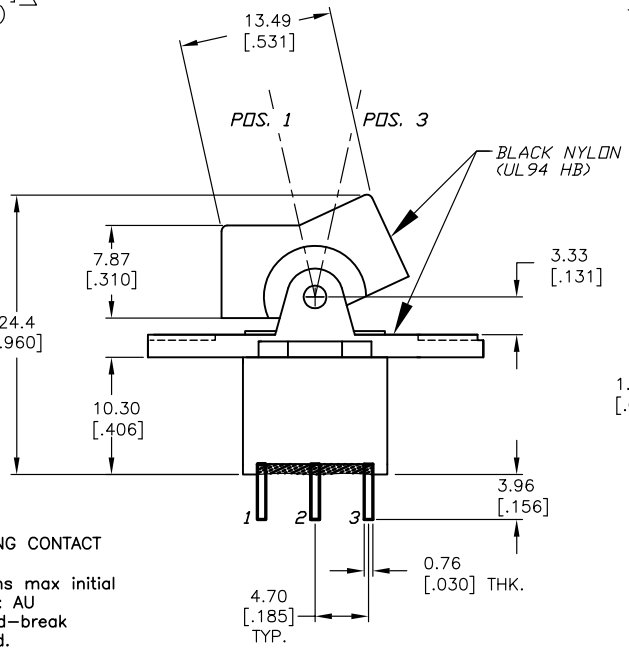

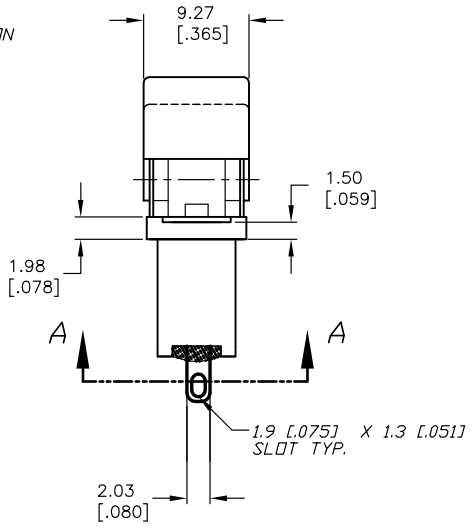

NOTES:

1. ALL DIMENSIONS IN MM [INCH]
2. GENERAL TOLERANCE: X.X=±0.4
   X.XX=±0.25
3. TERM. NOS. FOR REF. ONLY
4. RATING: 5A @120VAC or 28VDC
   2A @250VAC
5. MATERIAL: FIXED TERMINAL & MOVING CONTACT
   Copper Alloy w/Silver plate
6. CONTACT RESISTANCE: 10mILLI Ohms max initial
   @2-4VDC, 100mA for AG & AU
7. ELECTRICAL LIFE: 30,000 make-and-break
   cycles at full load.
8. INSULATION RESISTANCE: 1,000M ohm min.
9. DIELECTRIC STRENGTH: 1000V RMS @sea level
10. OPERATING TEMP.: -30°C to 85°C

REV.	ECN No.	DESCRIPTION	DATE	CHKD
A	13642	RELEASED FOR PRODUCTION	12/5/03	AR

THE INFORMATION CONTAINED IN THIS DOCUMENT IS PROPRIETARY TO E-SWITCH AND IS NOT TO BE COPIED OR TRANSFERRED

E-SWITCH®

TITLE				
300AWSP2R1BLKM1QE				
SCALE 2:1	DATE 12/5/03	DR AR	DWG T301201	REV A