Excellent Integrated System Limited

Stocking Distributor

Click to view price, real time Inventory, Delivery & Lifecycle Information:

E-Switch
300DP1R1M1QE

For any questions, you can email us directly:
sales@integrated-circuit.com

Distributor of E-Switch: Excellent Integrated System Limited
Datasheet of 300DP1R1M1QE - SWITCH ROCKER DPDT 5A 120V
Contact us: sales@integrated-circuit.com Website: www.integrated-circuit.com

SHEET OF

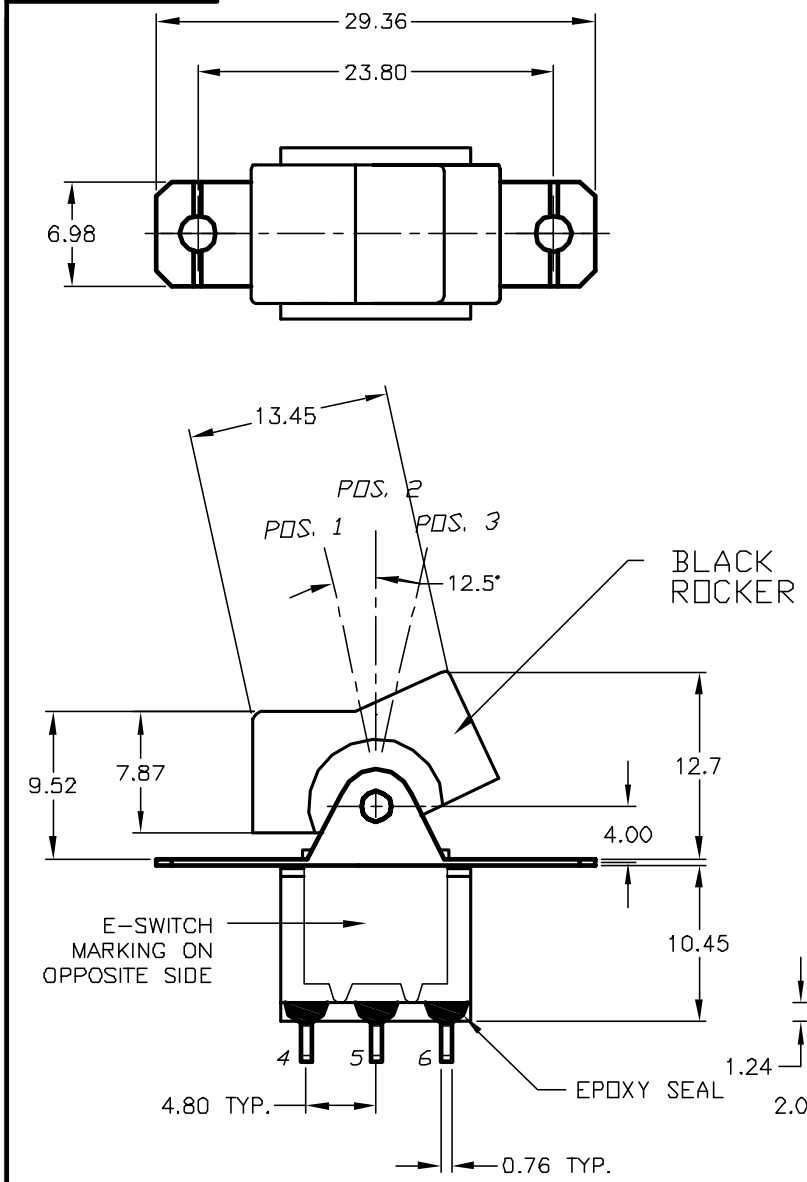

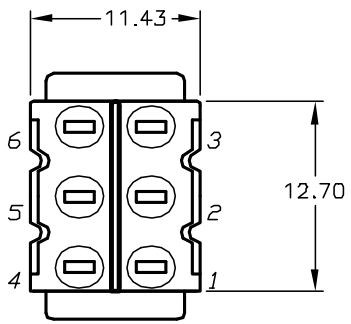

BOTTOM VIEW
BRACKET CROPPED FOR CLARITY

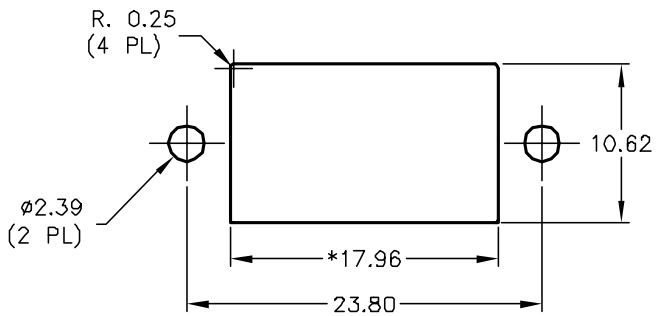

RECOMMENDED PANEL MOUNTING

PANEL THICKNESS

* DIMENSION IS 15.75/15.88
▲ FOR PANEL THICKNESS BETWEEN 1.52mm TO 3.18mm

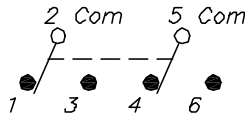

CIRCUIT: DPDT

SWITCH FUNCTION		
POS. 1	POS. 2	POS. 3
ON	NONE	ON
2-3,5-6	OPEN	2-1,5-4

NOTES:

1. ALL DIMENSIONS IN MM [INCH]
2. GENERAL TOLERANCE: X.X=±0.4
   X.XX=±0.25
3. TERM. NOS. FOR REF. ONLY
4. RATING: 5A @120VAC OR 28VDC
   2A @250VAC
5. MATERIAL: FIXED TERMINAL & MOVING CONTACT
   Copper Alloy w/Silver Plate
6. CONTACT RESISTANCE: 10mILLI Ohms max initial
   @2-4VDC, 100mA for AG & AU
7. ELECTRICAL LIFE: 50,000 make-and-break
   cycles at full load.
8. INSULATION RESISTANCE: 1,000M ohm min.
9. DIELECTRIC STRENGTH: 1000V RMS @sea level
10. OPERATING TEMP.: -30°C to 85°C

REV.	ECN No.	DESCRIPTION	DATE	CHKD
B	12032	REVISED AND REDRAWN	4/3/02	CB

THE INFORMATION CONTAINED IN THIS DOCUMENT IS PROPRIETARY TO E-SWITCH AND IS NOT TO BE COPIED OR TRANSFERRED

E-SWITCH®

TITLE 300 DP-1 R1 BLK M1 Q E

SCALE	DATE	DR	DWG	REV
2:1	4/3/02	CB	T321009	B