Excellent Integrated System Limited

Stocking Distributor

Click to view price, real time Inventory, Delivery & Lifecycle Information:

STMicroelectronics
STW4102IQT

For any questions, you can email us directly:
sales@integrated-circuit.com

Distributor of STMicroelectronics: Excellent Integrated System Limited
Datasheet of STW4102IQT - IC LI-ION BATT CHRGR DUAL 24QFN
Contact us: sales@integrated-circuit.com Website: www.integrated-circuit.com

STw4102

Dual USB/wall adapter Li-ion battery charger with gas gauge

Features

- Constant current constant voltage (CCCV) linear charger
- Common or separate USB/wall adapter inputs
- Fast charge current control up to 1 A for wall adapter and up to 500 mA for USB
- Support for currents higher than 1 A using external components
- Programmable charge voltage (4.1 V, 4.2 V, 4.3 V, 4.35 V) with 1% accuracy
- Thermal regulation
- Trickle charge mode at low battery voltage
- Wall adapter voltage up to 16 V
- Battery overvoltage protection at 4.7 V
- Gas gauge with 13-bit AD converter
- Battery voltage monitor with 7-12 bit AD converter
- I^2C interface for device monitoring and control
- Charge status output pin
- Power detection output pin
- Programmable watchdog security timer
- 4.7 V LDO regulator (with external power MOSFET)

Applications

- Cellular phones (GSM, CDMA, WCDMA), PDA, MP3 players, cordless phones
- Digital camera, USB appliances, bluetooth devices, portable navigation devices

Description

The STw4102 is a standalone constant current constant voltage (CCCV) linear charger specifically designed for Li-ion batteries.

QFN 24
(Plastic micropackage)

Pin connections
(top view)

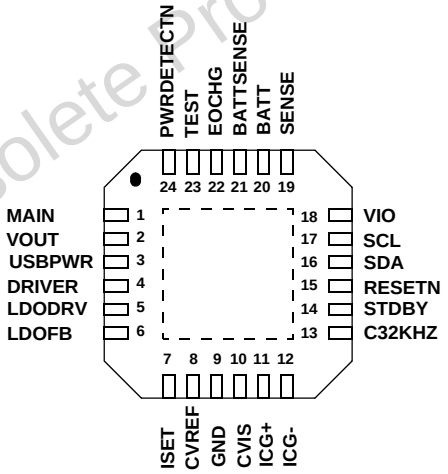

The STw4102 offers dual charging capability using separate inputs for USB cable and wall adapter, or a single input that accepts both.

The STw4102 also offers programmable fast charge current using an external resistor. A thermal regulation circuit limits the charge current against the die high power dissipation or high ambient temperature. An end of charge output pin indicates the charge termination when the fast charge current drops below 10% of the programmed current value.

The STw4102 includes an accurate gas gauge based on a 13-bit AD converter. An external resistor is used between battery and ground to sense a charge/discharge current. With a typical 30 mΩ resistor, current can be up to 2.5 A.

Obsolete Product(s) - Obsolete Product(s)

Distributor of STMicroelectronics: Excellent Integrated System Limited
Datasheet of STW4102IQT - IC LI-ION BATT CHRGR DUAL 24QFN
Contact us: sales@integrated-circuit.com Website: www.integrated-circuit.com

Contents

1 Block diagram 4

2 Pin assignment 5

3 Absolute maximum ratings and operating conditions 6

4 Electrical characteristics 7

Typical performance curves 11

5 Application schematics 14

5.1 Charge from USB or wall adapter 14

5.2 Charge currents higher than 1 Amp 15

5.3 Using LDO regulator to supply telephone from wall adapter 16

6 Battery charger 17

6.1 Charge cycle 17

6.2 Trickle charge 18

6.3 Charging from a wall adapter 18

6.4 Charging from a USB port 19

6.5 Charging using external power devices 19

6.6 Charge mode summary 19

6.7 Watchdog timer 20

6.8 Thermal regulation 20

7 Low drop-out regulator 21

8 Battery monitoring 22

8.1 Gas gauge 22

8.2 Battery voltage monitoring 23

9 Factory OTP options 24

10 I^2C interface 25

10.1 Read and write operations 25

Obsolete Product(s) - Obsolete Product(s)

Distributor of STMicroelectronics: Excellent Integrated System Limited
Datasheet of STW4102IQT - IC LI-ION BATT CHRGR DUAL 24QFN
Contact us: sales@integrated-circuit.com Website: www.integrated-circuit.com

10.2 Register mapping 26

11 Package information 31

12 Ordering information 33

13 Revision history 33

Obsolete Product(s) - Obsolete Product(s)

Distributor of STMicroelectronics: Excellent Integrated System Limited
Datasheet of STW4102IQT - IC LI-ION BATT CHRGR DUAL 24QFN
Contact us: sales@integrated-circuit.com Website: www.integrated-circuit.com

1 Block diagram

Figure 1. Internal block diagram

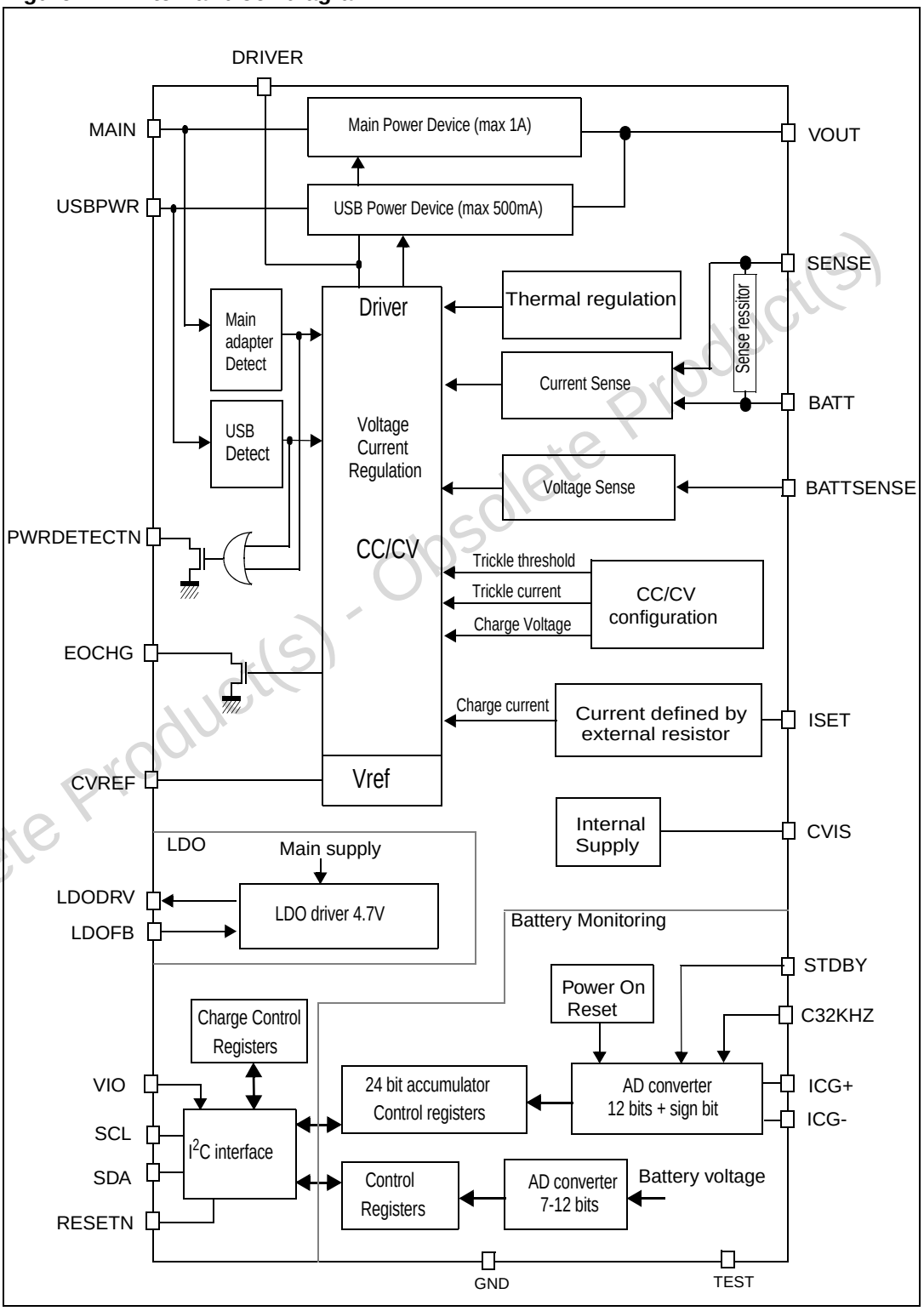

Obsolete Product(s) - Obsolete Product(s)

Distributor of STMicroelectronics: Excellent Integrated System Limited
Datasheet of STW4102IQT - IC LI-ION BATT CHRGR DUAL 24QFN
Contact us: sales@integrated-circuit.com Website: www.integrated-circuit.com

2 Pin assignment

Table 1. Pin descriptions

Pin #	Pin name	Type	Function
1	MAIN	Supply	Main power input from wall adapter or USB charger
2	VOUT	O_A	Power path output
3	USBPWR	Supply	Power supply from USB cable
4	DRIVER	O_A	Driver for external power switch (PMOS or PNP)
5	LDODRV	O_A	LDO power PMOS driver
6	LDOFB	I_A	LDO feedback regulation
7	ISET	O_A	Resistor to program the main charge current
8	CVREF	I_A	Bypass capacitor for internal voltage reference
9	GND	Ground	Analog and digital ground
10	CVIS	I_A	Bypass capacitor for internal supply
11	ICG+	I_A	Gas gauge sense resistor
12	ICG-	I_A	Gas gauge sense resistor
13	C32KHZ	I_D	External 32kHz clock input
14	STDBY	I_D	Gas gauge standby input (active low)
15	RESETN	I_D	Digital register reset (active low)
16	SDA	IO_D	I^2C serial data.
17	SCL	I_D	I^2C serial clock.
18	VIO	Supply	Supply for I/O
19	SENSE	I_A	Sense resistor input to regulate the charge current
20	BATT	Supply	Battery power voltage
21	BATTSENSE	I_A	Battery sense voltage
22	EOCHG	OD	End of charge output status. Pulled low when the fast charge current is above 10% of its programmed maximum value.
23	TEST	I_D	Reserved pin for factory test. To be connected to ground.
24	PWRDETECTN	OD	Main or USB plug-in detection. Pulled low when power is detected, open when no power is detected.

In this table, the following conventions are used:

I: Input
O: Output
I/O: Bidirectional
OD: Open Drain
A: Analog
D: Digital

Obsolete Product(s) - Obsolete Product(s)

Distributor of STMicroelectronics: Excellent Integrated System Limited
Datasheet of STW4102IQT - IC LI-ION BATT CHRGR DUAL 24QFN
Contact us: sales@integrated-circuit.com Website: www.integrated-circuit.com

3 Absolute maximum ratings and operating conditions

Table 2. Absolute maximum ratings (AMR)

Symbol	Parameter	Value	Unit
V_{MAIN}	Maximum supply voltage on MAIN input	20	V
V_{CC}	Voltage on EOCHG, LDODRV, DRIVER pins	-0.3 to V_{MAIN}	V
V_{USB}	Maximum supply voltage on USBPWR input	7	V
V_{batt}	Maximum voltage on BATT, BATTSENSE, PWRDETECTN	7	V
V_{IO}	Maximum supply voltage on V_{IO} pin	7	V
V_{DD}	Voltage on I/O pins (SCL, SDA, RESETN, C32KHZ, STDBY)	-0.3 to V_{IO}	V
P_d	Power dissipation	self-limited	
I_{sense}	Maximum current from SENSE to BATT	1	A
T_{stg}	Storage temperature	-55 to 150	°C
T_j	Maximum junction temperature	150	°C
R_{thja}	Thermal resistance junction-ambient(1)	45	°C/W
ESD	Electrostatic discharge (HBM human body model)(2)	2	kV

1. Package's exposed pad is soldered to a copper pad on the PCB with multiple vias to the ground plane.
2. Human body model: 100 pF discharged through a 1.5 kΩ resistor between two pins of the device, done for all couples of pin combinations with other pins floating.

Table 3. Operating conditions

Symbol	Parameter	Value	Unit
V_{main}	Operating supply voltage on MAIN	4.25 to 16	V
V_{CC}	Maximum voltage on EOCHG	16	V
V_{USB}	Operating supply voltage on USBPWR	4.25 to 5.5	V
V_{IO}	Operating supply voltage on VIO	1.45 to 3.0	V
V_{batt}	Max voltage on BATT, BATTSENSE, PWRDETECTN	5.0	V
V_{out}	Max voltage on VOUT	BATT +0.7	V
T_{oper}	Operating free air temperature range	-30 to 85	°C

Obsolete Product(s) - Obsolete Product(s)

Distributor of STMicroelectronics: Excellent Integrated System Limited
Datasheet of STW4102IQT - IC LI-ION BATT CHRGR DUAL 24QFN
Contact us: sales@integrated-circuit.com Website: www.integrated-circuit.com

4 Electrical characteristics

Table 4. CC/CV charger - V_{oper}= 5V, V_{batt}= 3.6V, T_{amb} = -30°C to 85°C (unless otherwise specified)

Symbol	Parameter	Conditions	Min	Typ	Max	Unit
Supply (V_{oper} from MAIN or USB)						
$I_{charger}$	Main or USB input operating current			2		mA
I_{STBY}	USBPWR input standby current	Charge off			40	µA
I_{batt_sense}	BSENSE input current	No charge			1	µA
I_{batt}	BATT input current	No charge			25	µA
POR_IS+	Power ON reset threshold+	CVIS internal supply	2.2	2.3	2.4	V
POR_IS-	Power ON reset threshold-	CVIS internal supply	2.1	2.2	2.3	V
Voltage regulation						
V_{charge_acc}	Output voltage accuracy	T_{amb}= 0°C to 85°C	-1		+1	%
R_{power}	Power path resistance	MAIN to BATT		0.6		Ω
$Battery_{ovv}$	Static battery overvoltage detection		4.55	4.7	4.8	V
$Battery_{ovv_hyst}$	Static battery overvoltage hysteresis			100		mV
Current regulation						
$I_{trickle}$	Trickle charge current	V_{batt}< $V_{trickle}$ Standard configuration Factory OTP option	 30 60	 60 120	 100 180	 mA mA
$V_{trickle}$	Trickle to fast charge threshold	Standard configuration	2.8	2.9	3.0	V
$V_{trickle_hyst}$	Trickle to fast charge threshold hysteresis			100		mV
I_{charge}	Main charge current range	Internal path	100		1000	mA
I_{charge_acc}	Main charge current accuracy	I_{charge}> 500mA	-15		+15	%
I_{USB}	USB charge current	REG_CHG0[7..6]: 00 01 10 11	 30	 60 200 400 0	 100 500	 mA mA mA mA
$EOCHG_{ith}$	End of charge threshold	% of current setting		10		%
$EOCHG_{ith_hys}$	End of charge threshold hysteresis	% of current setting		5		%
$T_{regulation}$	Regulated junction temperature			125		°C
$T_{softstart}$	Soft start from trickle to fast charge			100		µs

Obsolete Product(s) - Obsolete Product(s)

Distributor of STMicroelectronics: Excellent Integrated System Limited
Datasheet of STW4102IQT - IC LI-ION BATT CHRGR DUAL 24QFN
Contact us: sales@integrated-circuit.com Website: www.integrated-circuit.com

Table 4. CC/CV charger - V_{oper}= 5V, V_{batt}= 3.6V, T_{amb} = -30°C to 85°C (unless otherwise specified) (continued)

Symbol	Parameter	Conditions	Min	Typ	Max	Unit
Watchdog						
$t_{watchdog}$	Watchdog duration	REG_WDOG[2,1]: 00 01 10 11	 0.5 7.5 15 30	 1 15 30 60	 1.5 22.5 45 90	 min min min min
Input/output pins						
$V_{charger_det}$	Main charger supply voltage detection		2.4	2.5	2.6	V
$V_{charger_det_hys}$	Main charger supply voltage detection hysterisis			100		mV
V_{USB_det}	USB supply voltage detection		2.4	2.5	2.6	V
$V_{USB_det_hys}$	USB supply voltage detection hysteresis			100		mV
$Vol_{powerdetect}$	POWERDETECTN output capability	I_{sink}= 10mA			0.45	V
Vol_{EOCHG}	EOCHG output capability	I_{sink}= 10mA I_{sink}= 20mA			0.5 1.1	V V
I_{drv_sink}	Driver sink current	(If option enabled)	60			mA

Table 5. LDO - V_{main}= 6V, T_{amb} = -30°C to 85°C (unless otherwise specified)

Symbol	Parameter	Conditions	Min	Typ	Max	Unit
LDO_V	LDO regulated output voltage	Including line and load regulation (up to 1A), V_{main} > 6V	4.47	4.7	4.93	V
LDO_{power_th}	LDO power turn off threshold		6.8	7.2	7.5	V
$LDO_{power_th_hys}$	LDO power turn off threshold hysterisis			0.7		V
LDO_{PSRR}	LDO power supply rejection ratio	Up to 20kHz		50		dB

Obsolete Product(s) - Obsolete Product(s)

Distributor of STMicroelectronics: Excellent Integrated System Limited
Datasheet of STW4102IQT - IC LI-ION BATT CHRGR DUAL 24QFN
Contact us: sales@integrated-circuit.com Website: www.integrated-circuit.com

Table 6. Battery monitor - V_{batt}= 3.6V, T_{amb} = -30°C to 85° C (unless otherwise specified)

Symbol	Parameter	Conditions	Min	Typ	Max	Unit
POR_IS2+	Power ON reset threshold+	CVIS internal supply	2.6	2.7	2.8	V
POR_IS2-	Power ON reset threshold-	CVIS internal supply	2.5	2.6	2.7	V
Gas gauge A/D converter						
V_{os_gg}	Input offset voltage			40		µV
V_{in_gg}	Input voltage range		-80		+80	mV
I_{dd_gg}	Current consumption	CG_ENA=1			90	µA
I_{pdn_gg}	Current consumption in off mode	CG_ENA=0			1	µA
I_{in}	Input current for ICG+ and ICG-				500	nA
LSB_{gg}	AD converter granularity (LSB value)	12 bits + 1 sign bit		23.5		µV
Acc_{Tamb_gg}	Accuracy at ambient temperature	External resistor at 1% No calibration		3		%
Battery voltage A/D converter						
V_{in_mon}	Input voltage range	BATT voltage	1		5	V
I_{dd_mon}	Current consumption	ADPOWERON=1		190		µA
I_{pdn_mon}	Current consumption in off mode	ADPOWERON=0			1	µA
LSB_{mon}	AD converter granularity (LSB value)	7 bits 12 bits		45.4 1.42		mV mV
Acc_{Tamb_mon}	Accuracy at ambient temperature	No calibration		3		%
Digital I/O pins (SCL, SDA, STDBY, C32KHZ, RESETN)						
V_{il}	Input pin low voltage		0		0.3 x V_{IO}	V
V_{ih}	Input pin high voltage		0.7 x V_{IO}		V_{IO}	V
V_{ol}	SDA output pin low voltage	I_{sink}= 3mA			0.2 x V_{IO}	V

Obsolete Product(s) - Obsolete Product(s)

Distributor of STMicroelectronics: Excellent Integrated System Limited
Datasheet of STW4102IQT - IC LI-ION BATT CHRGR DUAL 24QFN
Contact us: sales@integrated-circuit.com Website: www.integrated-circuit.com

Table 7. I^2C timing - V_{IO}= 2.8V, T_{amb} = -30°C to 85° C (unless otherwise specified)

Symbol	Parameter	Conditions	Min	Typ	Max	Unit
F_{scl}	SCL clock frequency				400	kHz
$t_{hd,sta}$	Hold time (repeated) START condition		0.6			µs
t_{low}	LOW period of the SCL clock		1.3			µs
t_{high}	HIGH period of the SCL clock		0.6			µs
$t_{su,dat}$	Setup time for repeated START condition		0.6			µs
$t_{hd,dat}$	Data hold time		0		0.9	us
t_r	Rise time of both SDA and SCL signals		20+ 0.1C_b		300	ns
t_f	Fall time of both SDA and SCL signals		20+ 0.1C_b		300	ns
$t_{su,sto}$	Setup time for STOP condition		0.6			µs
C_b	Capacitive load for each bus line				400	pF

Figure 2. I^2C timing diagram

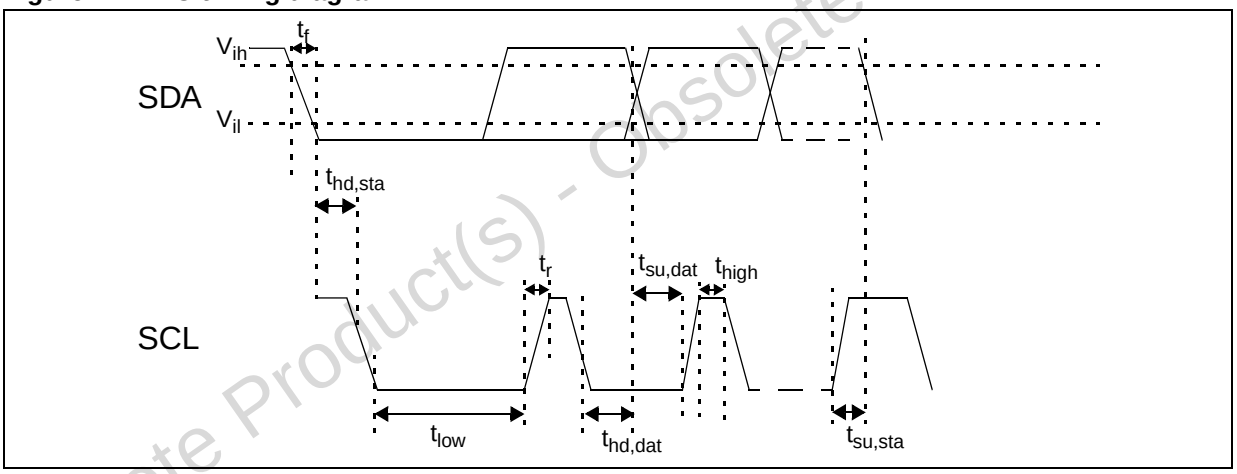

Obsolete Product(s) - Obsolete Product(s)

Distributor of STMicroelectronics: Excellent Integrated System Limited
Datasheet of STW4102IQT - IC LI-ION BATT CHRGR DUAL 24QFN
Contact us: sales@integrated-circuit.com Website: www.integrated-circuit.com

Typical performance curves

Figure 3. Charger voltage vs. charge current (Main charge, 4.2V and 1A settings)

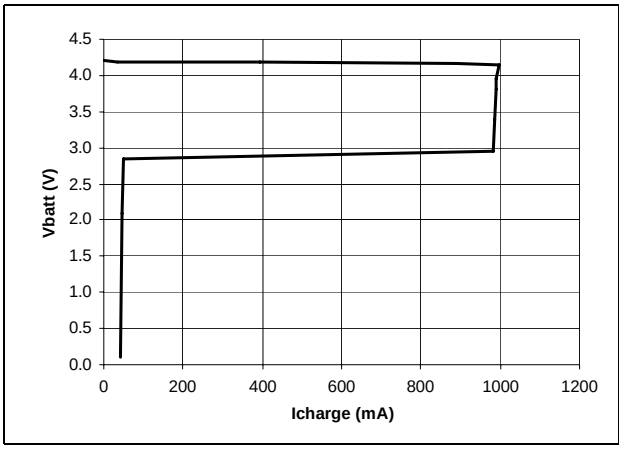

Figure 4. Charger voltage vs. charge current (USB charge, 4.2V setting)

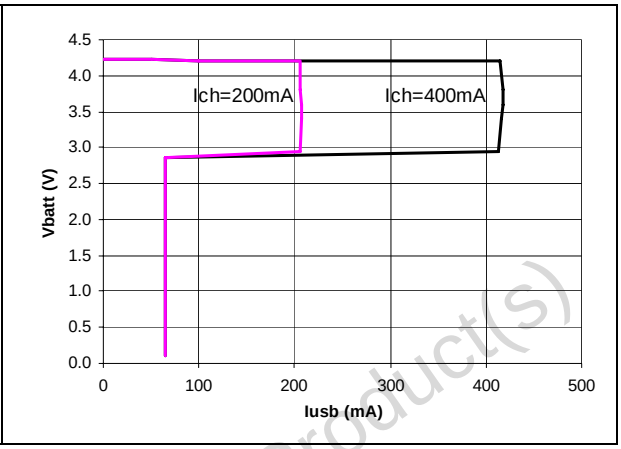

Figure 5. Charge current vs. temperature (charge from MAIN, 1A setting)

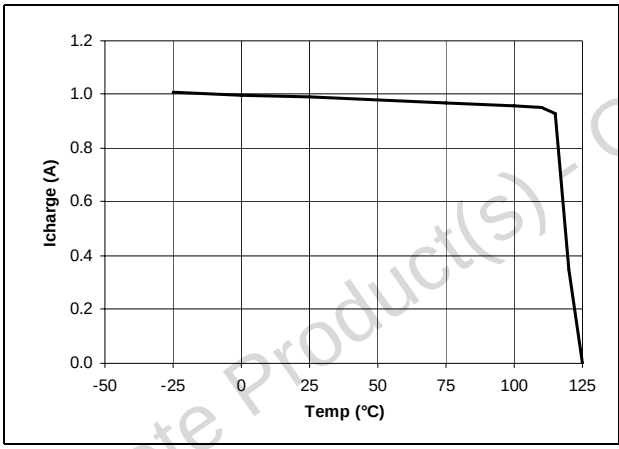

Figure 6. Charge current vs. temperature (charge from USBPWR)

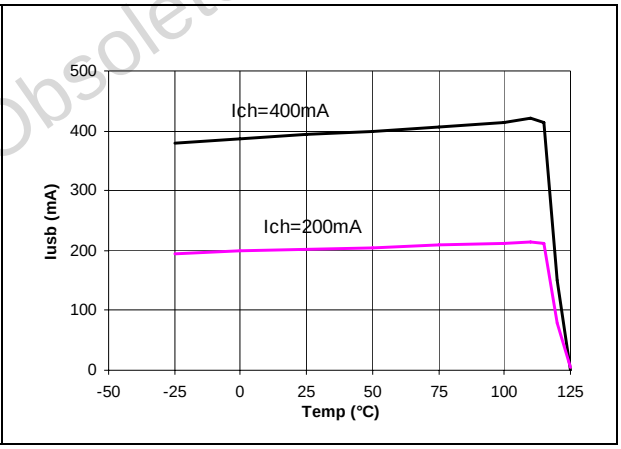

Figure 7. Charge voltage vs. temperature (4.2V nominal setting)

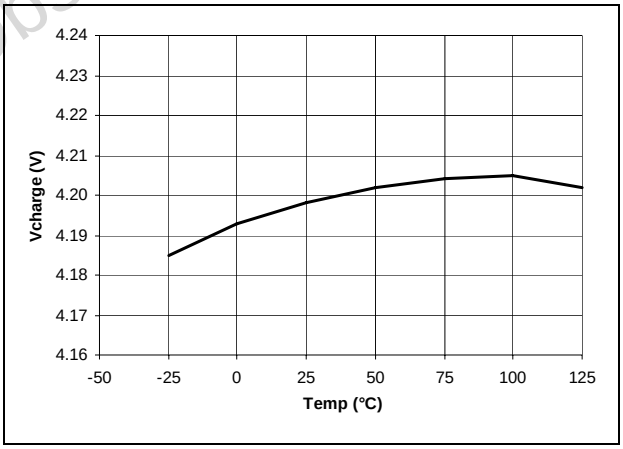

Obsolete Product(s) - Obsolete Product(s)

Distributor of STMicroelectronics: Excellent Integrated System Limited
Datasheet of STW4102IQT - IC LI-ION BATT CHRGR DUAL 24QFN
Contact us: sales@integrated-circuit.com Website: www.integrated-circuit.com

Figure 8. USB standby input current vs. temperature (charge disabled)

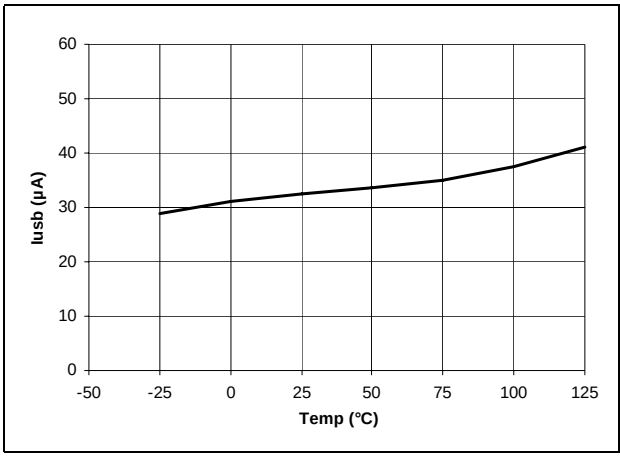

Figure 9. Battery standby current vs temperature (no MAIN, no USBPWR, gas gauge disabled)

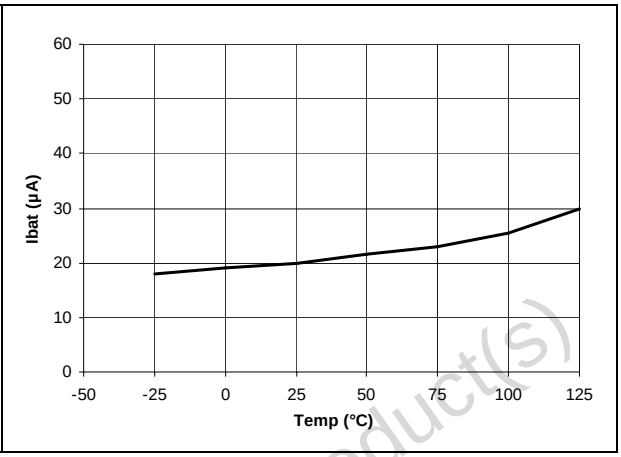

Figure 10. Watchdog period vs. temperature (normalized to value at 25°C)

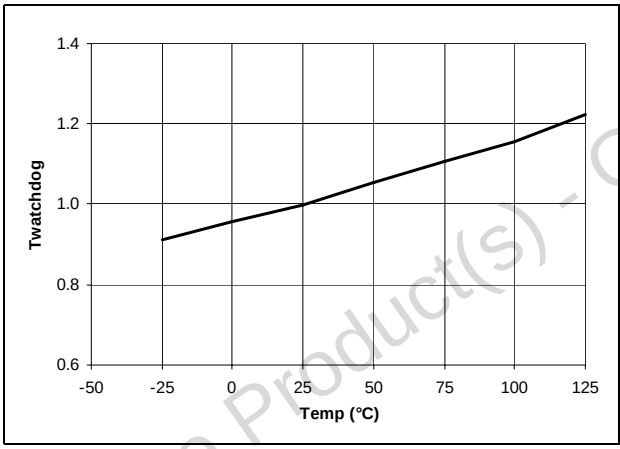

Figure 11. LDO output voltage vs. temperature (10 mA output current)

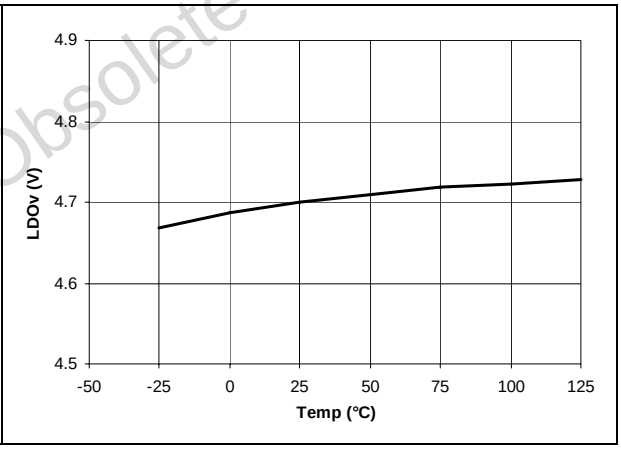

Figure 12. LDO output voltage vs. output current

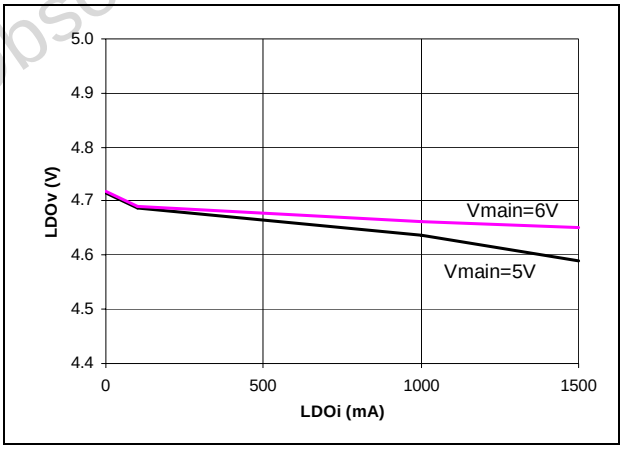

Obsolete Product(s) - Obsolete Product(s)

Distributor of STMicroelectronics: Excellent Integrated System Limited
Datasheet of STW4102IQT - IC LI-ION BATT CHRGR DUAL 24QFN
Contact us: sales@integrated-circuit.com Website: www.integrated-circuit.com

Figure 13. Waveforms at USB plug-in

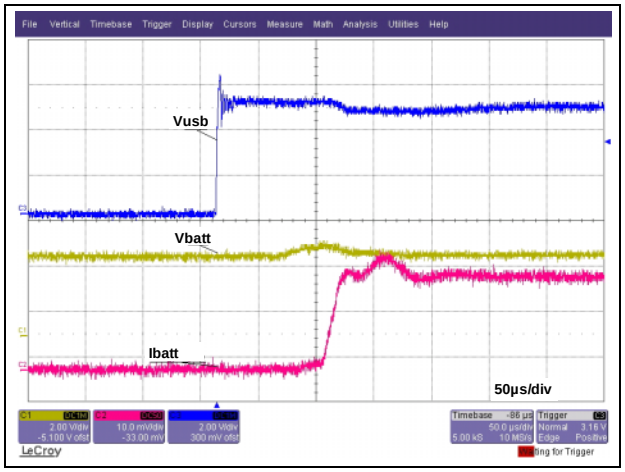

Figure 14. Switching from USB charge to main charge

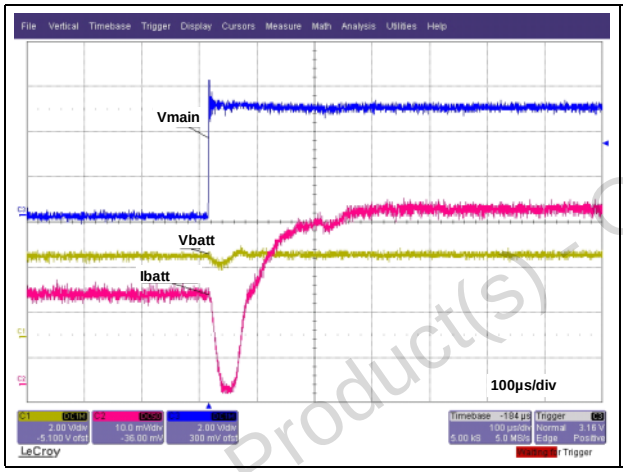

Figure 15. Switching from main charge to USB charge

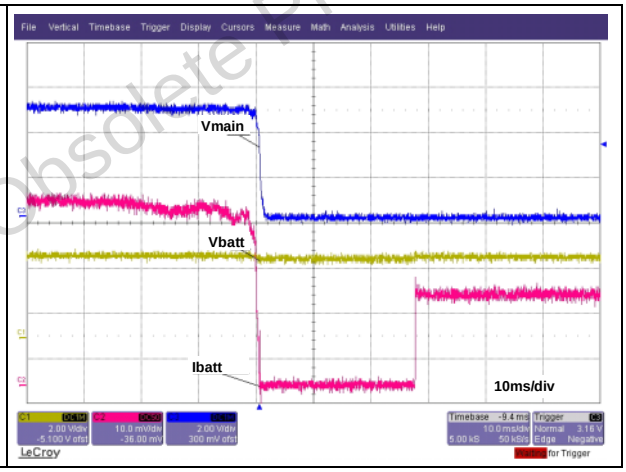

Obsolete Product(s) - Obsolete Product(s)

Distributor of STMicroelectronics: Excellent Integrated System Limited
Datasheet of STW4102IQT - IC LI-ION BATT CHRGR DUAL 24QFN
Contact us: sales@integrated-circuit.com Website: www.integrated-circuit.com

5 Application schematics

5.1 Charge from USB or wall adapter

The MAIN input is used with either a wall adapter or a USB charger. The charge current can be programmed to 100 mA or 500 mA max for use with a USB 2.0 port, or programmed to the value set by the R_{set} resistor for use with a wall adapter or a dedicated USB charger. The USBPWR input is used only for charging from a USB port (100 mA or 500 mA max).

Figure 16. Charge using internal power devices

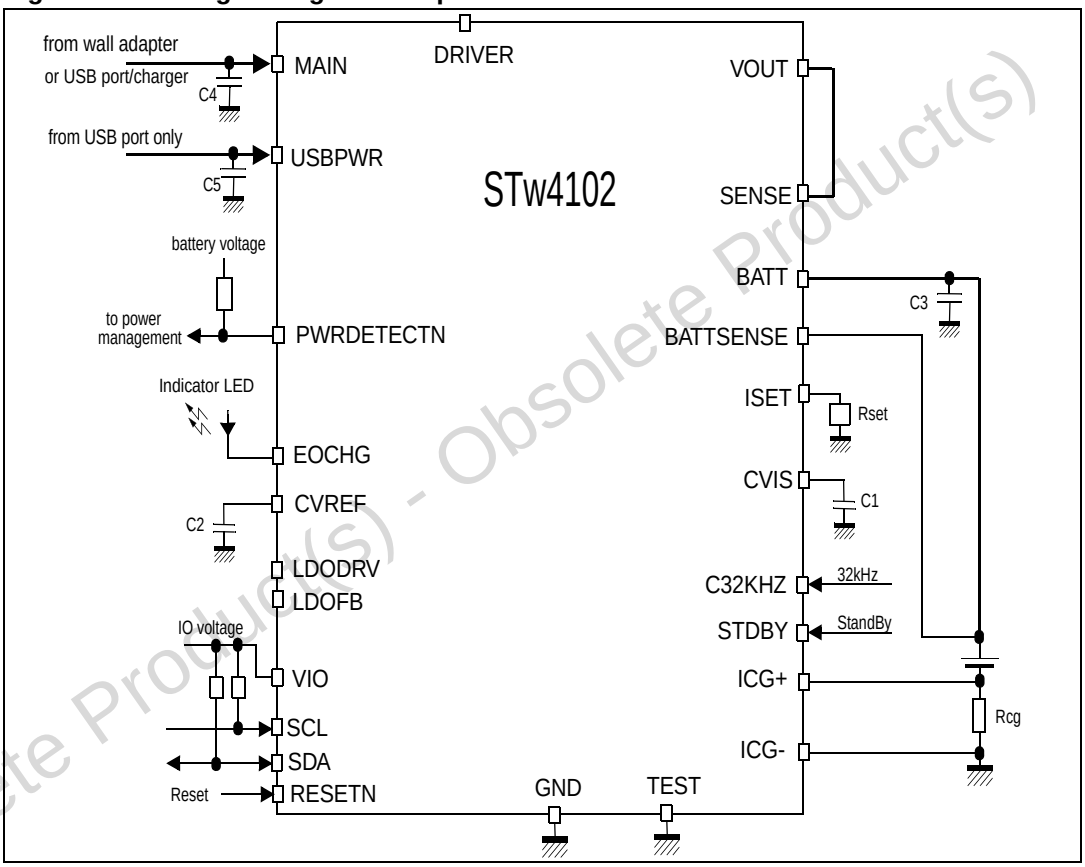

Obsolete Product(s) - Obsolete Product(s)

Table 8. External component list

Name	Typ. value	Tolerance	Comments
R_{set}	12k to 120k	1%	Main charge current setting
R_{cg}	30mΩ	1%	Gas gauge sense resistor
C1	1µF		Internal supply decoupling capacitor
C2	1µF		Internal voltage reference decoupling capacitor
C3	0.1 to 22µF		When the battery is removed, a capacitor of at least 15µF is required for low ripple on the battery line.
C4	0.1 to 1µF		MAIN input decoupling capacitor
C5	0.1 to 1µF		USBPWR input decoupling capacitor

Distributor of STMicroelectronics: Excellent Integrated System Limited
Datasheet of STW4102IQT - IC LI-ION BATT CHRGR DUAL 24QFN
Contact us: sales@integrated-circuit.com Website: www.integrated-circuit.com

5.2 Charge currents higher than 1 Amp

One-time programming (OTP) options offer the ability to use an external power device or an external sense resistor to handle charge currents higher than 1 A from the wall adapter. These OTP options are set by STMicroelectronics at factory level.

Figure 17. Charge using external power devices

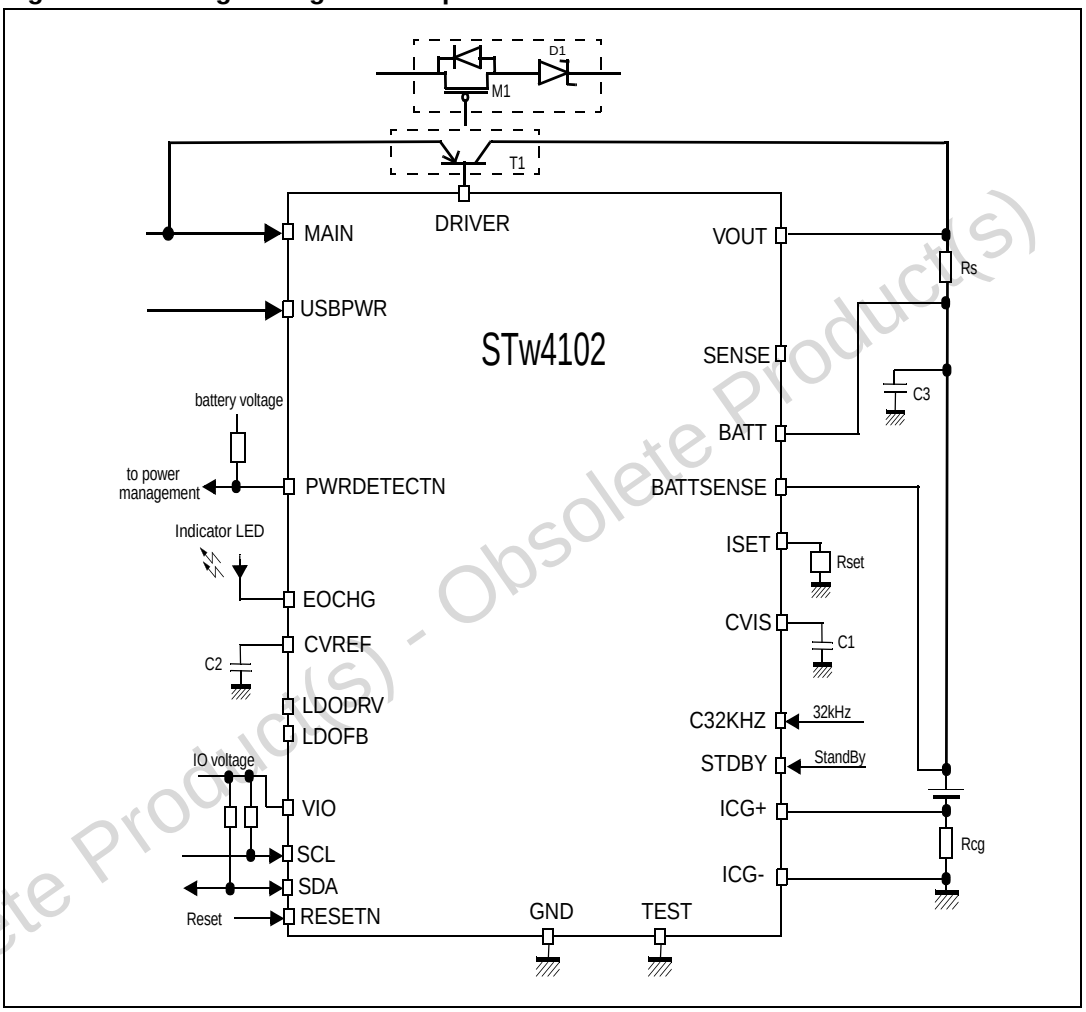

Obsolete Product(s) - Obsolete Product(s)

Table 9. Component list for external power devices

Name	Typ. value	Tolerance	Comments
R_{set}	8k to 12k	1%	Main charge current setting
R_S	200mΩ	1%	External current sense resistor
T1 or M1 + D1	STT818B STS2DPFS20V		PNP transistor PMOS transistor with Schottky diode

Distributor of STMicroelectronics: Excellent Integrated System Limited
Datasheet of STW4102IQT - IC LI-ION BATT CHRGR DUAL 24QFN
Contact us: sales@integrated-circuit.com Website: www.integrated-circuit.com

5.3 Using LDO regulator to supply telephone from wall adapter

The regulator with external power PMOS (M1) supplies the telephone while the battery is discharged or unplugged. When the charger is unplugged, the phone is supplied by the battery through Power MOS M2. A Schottky diode (D1) avoids reverse current.

Figure 18. Charge power path and regulator

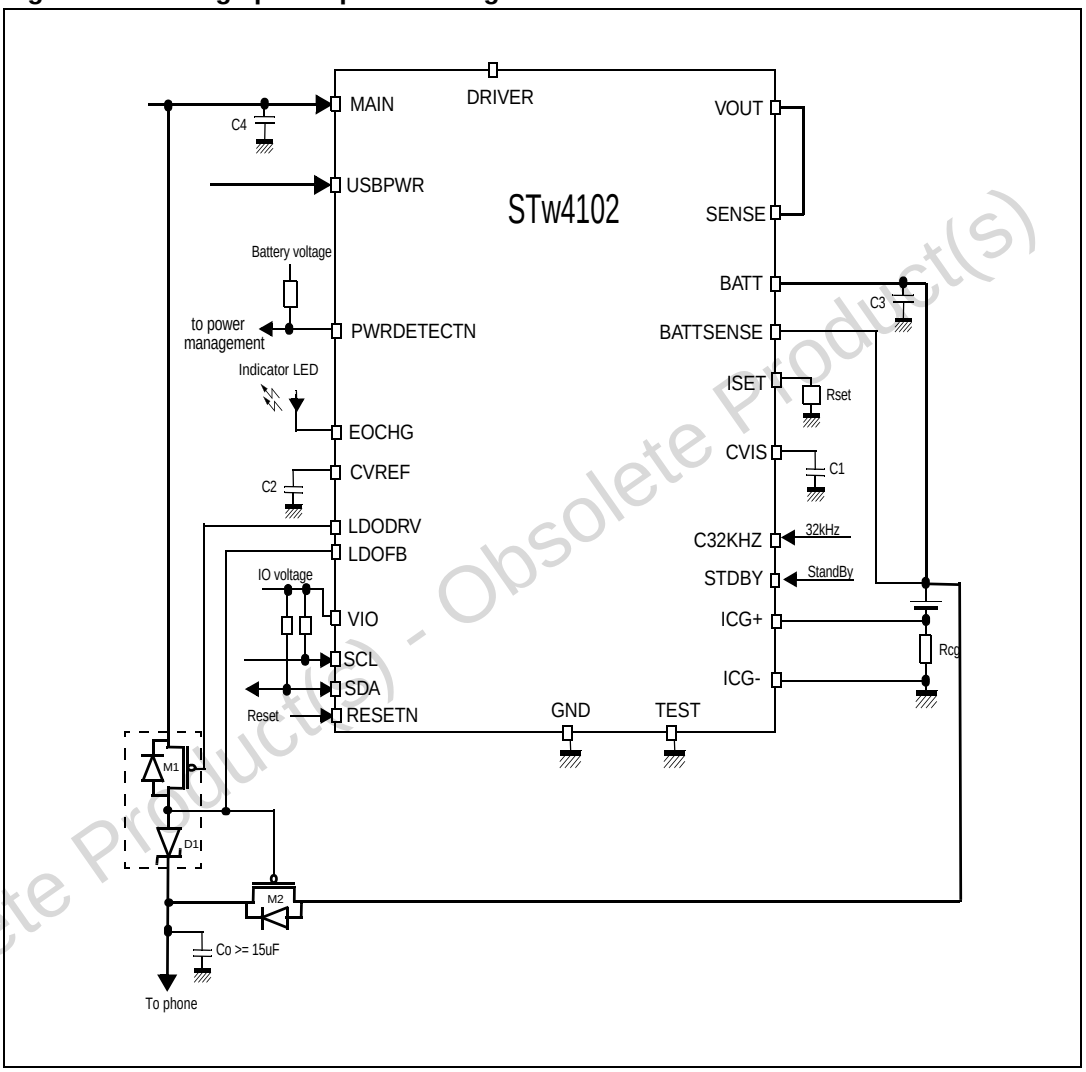

Obsolete Product(s) - Obsolete Product(s)

Table 10. Component list for LDO regulator

Name	Typ. value	Tolerance	Comments
M1 + D1	STS2DPFS20V		PMOS transistor with Schottky diode
M2	STT5PF20V		PMOS transistor
Co	10µF to 22µF		An output capacitor Co of at least 10µF is required.
C4	Co		An input capacitor C4 equal to or larger than Co is required on MAIN input.

Distributor of STMicroelectronics: Excellent Integrated System Limited
Datasheet of STW4102IQT - IC LI-ION BATT CHRGR DUAL 24QFN
Contact us: sales@integrated-circuit.com Website: www.integrated-circuit.com

6 Battery charger

6.1 Charge cycle

The charge cycle is initiated when the presence of a power source on either the MAIN or USBPWR inputs is detected (the PWRDETECTN pin goes low), while the charger is enabled by the CHG_ENA bit of the REG_CHG1 control register. If both supplies are connected, the MAIN input path is selected.

The EOCHG output pin is driven low as the charge begins. If the battery voltage is lower than the trickle threshold, the charge cycle begins in trickle mode with a low current (default value: 60 mA) until the battery voltage reaches the trickle voltage threshold (default value: 2.9 V). Once the battery voltage rises above this threshold, the charger enters into fast charge mode where the programmed charge current I_{charge} or I_{USB} is supplied to the battery.

When the battery voltage approaches the programmable charge voltage (4.10V, 4.20V, 4.30V or 4.35V), the charger enters into a constant voltage charging mode and the charging current decreases. When the current level reaches the end-of charge level (10% of I_{charge}), the EOCHG status pin is switched off (open) to indicate that the battery is almost fully charged, and the charger enters maintenance mode.

In maintenance mode, the charger continues to monitor the battery voltage to maintain the battery voltage level. The maintenance mode lasts until the charge is stopped by clearing the CHG_ENA bit in the REG_CHG1 control register, or by removing the power source (PWRDETECTN is opened).

Figure 19. Charge flow (simplified)

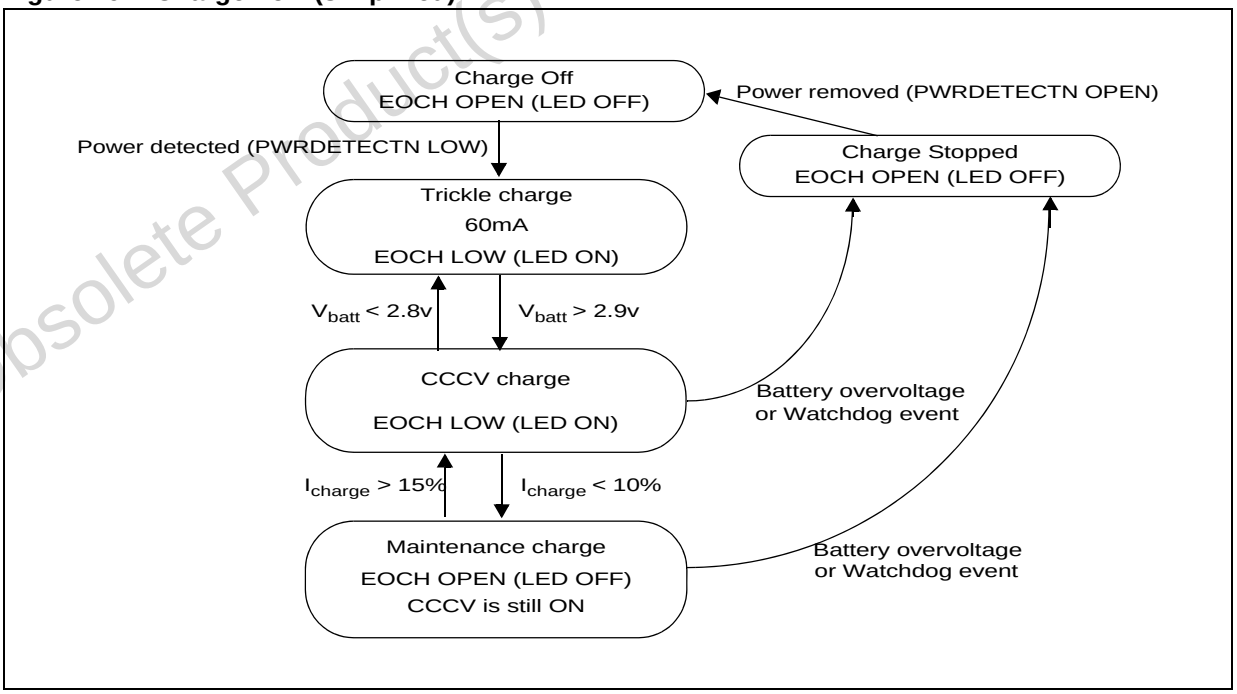

Obsolete Product(s) - Obsolete Product(s)

Distributor of STMicroelectronics: Excellent Integrated System Limited
Datasheet of STW4102IQT - IC LI-ION BATT CHRGR DUAL 24QFN
Contact us: sales@integrated-circuit.com Website: www.integrated-circuit.com

6.2 Trickle charge

The trickle charge mode is enabled when the battery voltage V_{batt} is lower than the trickle voltage threshold $V_{trickle}$. An internal current source charges the battery. When V_{batt} is above $V_{trickle}$, the trickle current generator is off and the battery is charged using the constant current method.

The trickle voltage threshold and trickle current are defined by OTP configuration bits and are factory set to 2.9 V and 60 mA by default. Other values are possible, see *Section 9: Factory OTP options on page 24*.

6.3 Charging from a wall adapter

The MAIN input is used for charging from a wall adapter or a dedicated USB charger. The SEL_DC_USB bit (bit 5 of register REG_CHG0) must be set to 0. The fast charge current is defined by the external resistor R_{set} connected to the ISET pin, and can be set up to 1 A.

The value of the fast charge current is given by the following formula:

$$I_{charge} = 12000 / R_{set}$$

In the constant voltage mode, the charger output voltage is regulated with 1% accuracy. The charger output voltage is programmable using the REG_CHG0 register, bits 3 and 4 (see *Table 11*).

Table 11. Charger output voltage

REG_CHG0[4]	REG_CHG0[3]	V_{charge}
0	0	4.10V +/-1%
0	1	4.20V +/-1%
1	0	4.30V +/-1%
1	1	4.35V +/-1%

Figure 20. Main charge mode

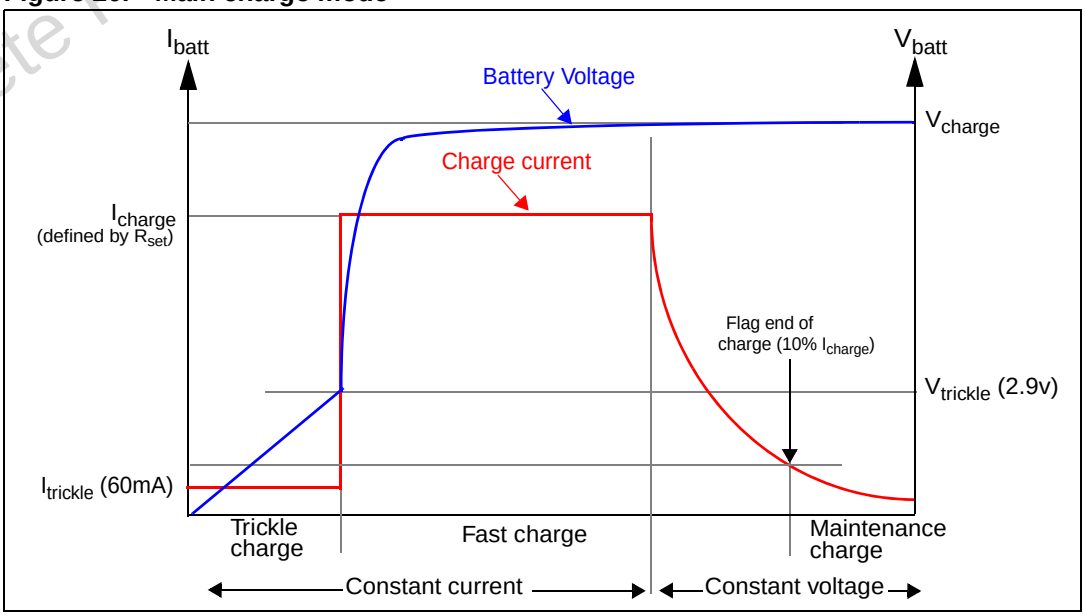

Obsolete Product(s) - Obsolete Product(s)

Distributor of STMicroelectronics: Excellent Integrated System Limited
Datasheet of STW4102IQT - IC LI-ION BATT CHRGR DUAL 24QFN
Contact us: sales@integrated-circuit.com Website: www.integrated-circuit.com

6.4 Charging from a USB port

The MAIN or USBPWR input can be used to charge from a USB 2.0 port. When using the MAIN input, bit SEL_DC_USB (bit 5 of register REG_CHG0) must be set to 1. Charging from a USB port is similar to charging from a wall adapter, except the fast charge current I_{USB} is set internally and depends on bits 6 and 7 of the control register REG_CHG0.

Table 12. USB charge current

REG_CHG0[7]	REG_CHG0[6]	I_{USB} (typ)
0	0	60mA (100 mA max)
0	1	200mA
1	0	400mA (500 mA max)
1	1	off

6.5 Charging using external power devices

To support charge currents higher than 1 A from the main supply adapter, the STw4102 provides the option to use an external power device and sense resistor. This OTP option is factory set.

The STw4102 driver is able to drive an external PNP (STT818B or equivalent) or a PMOS plus Schottky diode (STS2DPFS20V or equivalent). The driver maximum sink current is 60 mA.

The external current sensing device is usually a 200 mΩ shunt resistor. With this resistor value, the trickle and USB charge currents are close to the nominal values.

6.6 Charge mode summary

Table 13 summarizes the different charge modes.

Table 13. Charge modes

V_{batt}	MAIN detected	USBPWR detected	CHG_ENA bit	SEL_DC_USB bit	Charge
-	x	x	0	x	Charge disabled
	0	0	1	x	No charge
under $V_{trickle}$	1	x	1	x	Trickle charge from MAIN
	0	1			Trickle charge from USBPWR
above $V_{trickle}$	1	x	1	0	Fast charge from MAIN input, current set by Rset
			1	1	Fast charge from MAIN input, current set by USB_ICHG bits
	0	1	1	x	Fast charge from USBPWR input, current set by USB_ICHG bits

Obsolete Product(s) - Obsolete Product(s)

Distributor of STMicroelectronics: Excellent Integrated System Limited
Datasheet of STW4102IQT - IC LI-ION BATT CHRGR DUAL 24QFN
Contact us: sales@integrated-circuit.com Website: www.integrated-circuit.com

6.7 Watchdog timer

When the fast charge is active, a watchdog timer starts to prevent damage on the battery. The system controller refreshes the watchdog periodically in order let the charge continue. When the watchdog time elapses, the charge is stopped.

When the charge starts in trickle mode, to allow the battery to be charged although the system controller is not running, the watchdog is disabled. However, if for any reason the charger goes from fast charge mode to trickle mode, then the watchdog is not disabled to protect against battery failure.

Watchdog timing can be 1 minute, 15 minutes, 30 minutes or 60 minutes. It is programmable through the I^2C interface. The watchdog can be reset by the I^2C interface (bit WDOG_RST) or by unplugging the charger (PWRDETECTN goes to low). The watchdog can also be enabled and disabled through the I^2C interface.

In the standard configuration, the default state at powerup is watchdog enabled and the timing is one minute.

6.8 Thermal regulation

A thermal regulation circuit limits the charge current in case of high power dissipation due to high input voltage or high ambient temperature. The charge current is progressively reduced to maintain the die temperature in a safe area. This allows to charge the battery with the highest possible current depending on the operating conditions, and protects the device against any damage.

Obsolete Product(s) - Obsolete Product(s)

Distributor of STMicroelectronics: Excellent Integrated System Limited
Datasheet of STW4102IQT - IC LI-ION BATT CHRGR DUAL 24QFN
Contact us: sales@integrated-circuit.com Website: www.integrated-circuit.com

7 Low drop-out regulator

The purpose of the low drop-out regulator (LDO) is to supply the phone directly from the wall adapter when the battery is low or not present. When the wall adapter is present, MOSFET is off and the phone supply is regulated at 4.7 V minus the drop voltage across D1. When the MAIN pin is not connected, MOSFET M2 is on (the gate is pulled down) and the D1 diode avoids any reverse current. The LDO output current is limited by The M1 MOSFET and D1 diode current capabilities. An output capacitor C_o of at least 15 µF is required. The schematics are illustrated in *Figure 21*.

When the battery is fully discharged, the regulator can charge the battery from the main supply and at the same time supply the phone, which avoids waiting for the battery to be charged up to the minimum operating voltage before using the phone.

Figure 21. Regulator

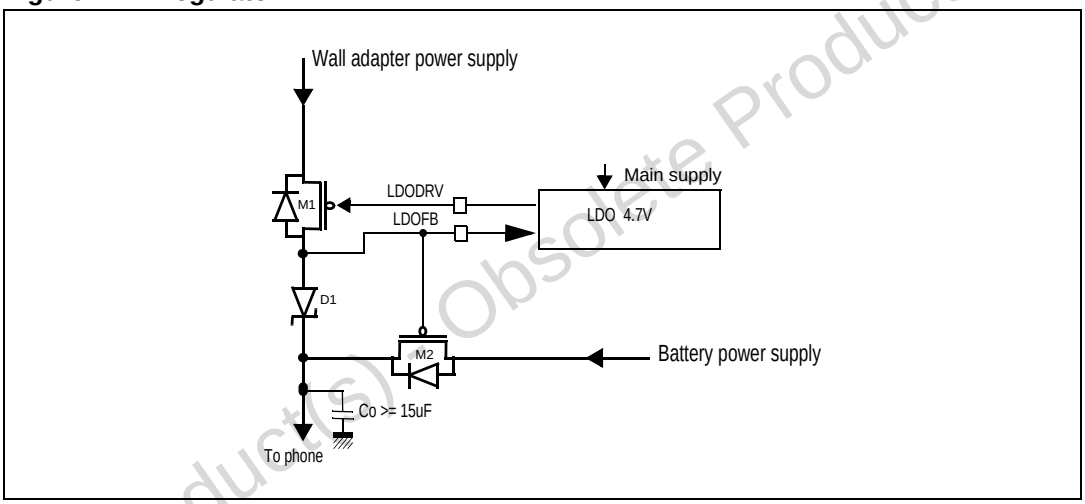

When the main supply is above the low dropout threshold LDO_{power_th} (about 7.2 V), then the LDO is turned off to protect the external PMOS against high power dissipation as shown in *Figure 22*. LDO_{power_th} hysteresis is around 0.7 V. By default, this protection feature is enabled, but can be disabled at factory level by OTP.

Figure 22. Supply voltage

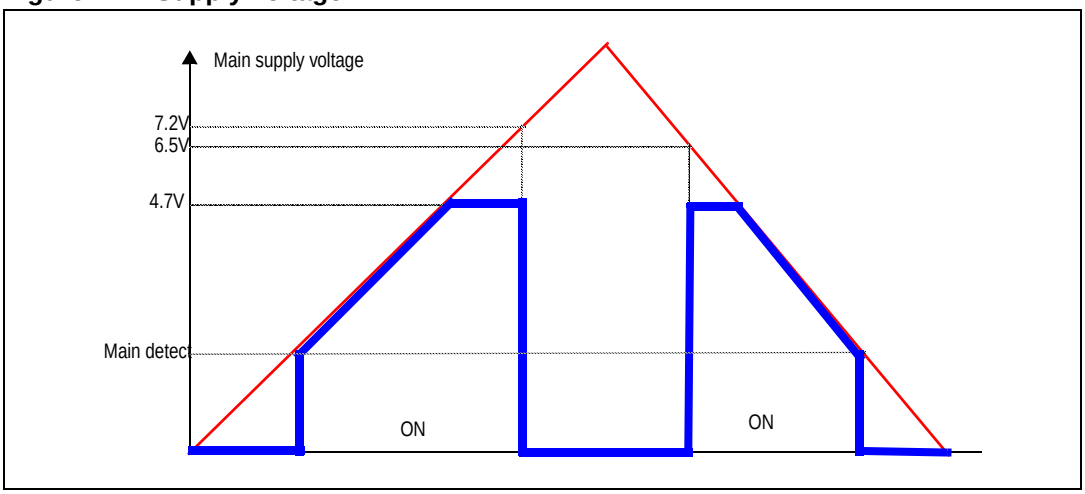

Obsolete Product(s) - Obsolete Product(s)

Distributor of STMicroelectronics: Excellent Integrated System Limited
Datasheet of STW4102IQT - IC LI-ION BATT CHRGR DUAL 24QFN
Contact us: sales@integrated-circuit.com Website: www.integrated-circuit.com

8 Battery monitoring

8.1 Gas gauge

The gas gauge is designed to monitor the battery capacity. A current sensing resistor (typically of 30 mΩ) is needed between the negative terminal of the battery and the ground. The sensing resistor voltage drop is input to a 13-bit integrating AD converter. When a conversion cycle is completed, depending on the output sign, the result is forwarded to the charge or discharge 24-bit accumulator, and the number of conversions is incremented in a 12-bit counter.

One accumulator accumulates current flowing into the battery during charging and the other accumulates discharge current during system operation. The remaining battery charge is given by the difference between the charge and discharge accumulators.

Figure 23. Gas gauge block diagram

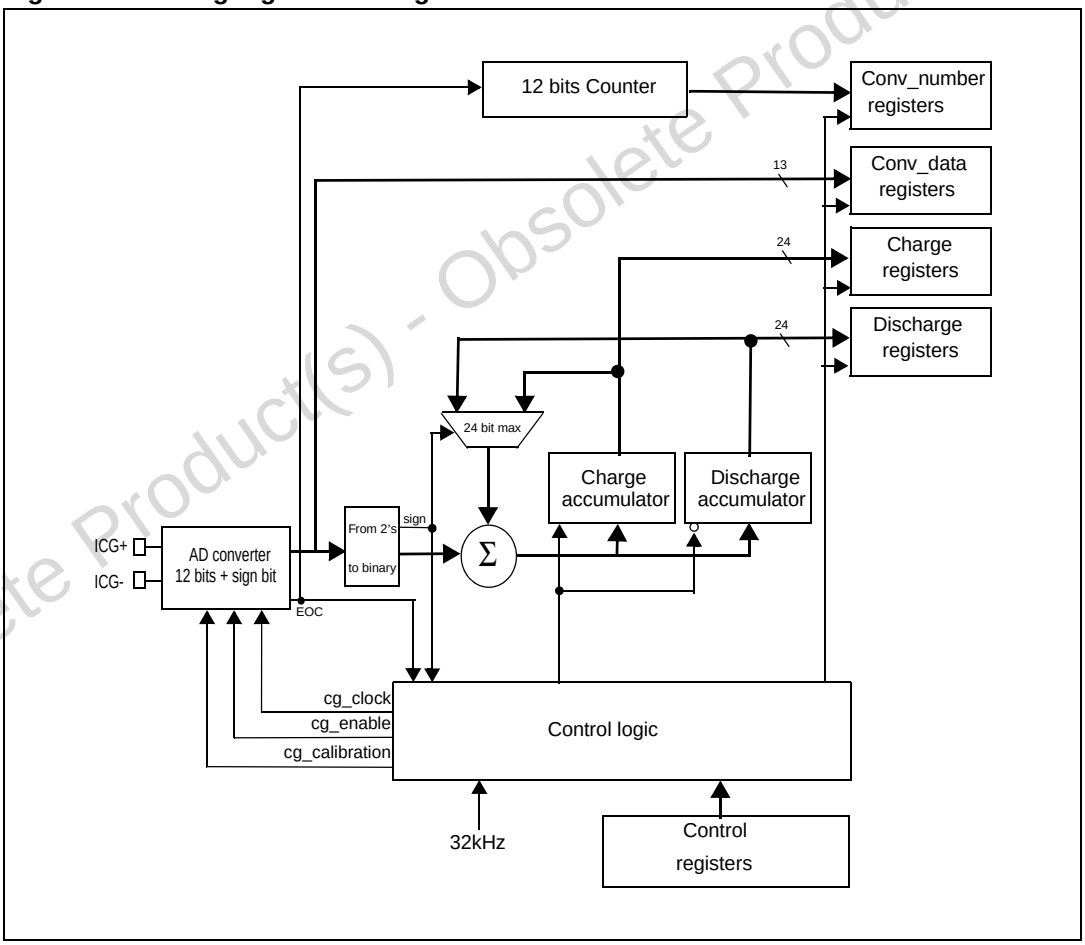

Obsolete Product(s) - Obsolete Product(s)

The Digital Base Band (DBB) can control, enable and read gas gauge data through I^2C control registers. The DBB can read the value of the most recent conversion in two's complement format by reading the CONVDATA registers.

The RD_REQ bit enables the transfer of the charge/discharge accumulators and conversion counter register. The transfer can take up to eight 32 kHz cycles, therefore a delay of

Distributor of STMicroelectronics: Excellent Integrated System Limited
Datasheet of STW4102IQT - IC LI-ION BATT CHRGR DUAL 24QFN
Contact us: sales@integrated-circuit.com Website: www.integrated-circuit.com

approximately 250 microseconds must be respected between the time the RD_REQ bit is set and the actual register reading. The RD_REQ bit is automatically cleared after the transfer.

A high value written to the RST_CHRG, RST_DCHRG or RST_COUNTER bits of the control register resets respectively the charge accumulator, discharge accumulator or conversion counter. If these bits are set together with the RD_REQ bit, then the reset occurs after the transfer to the charge, discharge or conversion counter register respectively. The RST_CHRG, RST_DCHRG or RST_COUNTER bits are automatically cleared after the reset.

The differential inputs are scaled to the full range of the AD converter, introducing a small offset error. A high value written to the CG_CAL bit of the control register connects the inputs of the AD converter together, allowing the DBB to measure the digital offset error. Using this measurement, the gas gauge can be calibrated to reduce the offset error.

The conversion cycle of a 12-bit plus 1 sign-bit AD converter is 2^{13} (8192) clock cycles. Using the 32.768kHz RTC clock, the conversion cycle time is 250 ms. The LSB value is 23.54 µV, which corresponds to a current of 784.7 µA with a typical 30 mΩ sense resistor. Given a 250 ms conversion cycle time, this LSB value corresponds to a charge of 54.5 nAh. Under these conditions, the 24-bit accumulator has a capacity of 914 mAh.

The gas gauge system is disabled when the battery voltage is below the Power On Reset threshold (2.7 V), or when the RESETN pin is driven low (CG_ENA bit default value is 0).

During normal operation, either the STDBY pin or the CG_ENA bit can be used to disable the gas gauge function. When the STDBY pin is low, the gas gauge is disabled without waiting for the end of the current conversion. When the CG_ENA bit is low, the current gauge is disabled at the end of the current conversion.

Obsolete Product(s) - Obsolete Product(s)

8.2 Battery voltage monitoring

The battery voltage can be measured by means of a 7- or 12-bit A/D converter. This function is enabled and configured using the following bits of the ADCTRL register:

- The ADPOWERON bit enables battery voltage monitoring.
- The ADRESOLUTION bit allows to select 7- or 12-bit conversion.
- The ONSTATE bit is set when the ADC converter is ready.
- The ADSTART bit starts a conversion; it is automatically cleared after writing.
- The ADRUN bit indicates that a conversion is in progress. The result is available when the ADRUN bit goes low, and it can be read in the ADDATA registers.

A high value written to the ADCAL bit of the control register connects the input of the A/D converter to ground, allowing the DBB to measure the digital offset error. Using this measurement, the AD converter can be calibrated to reduce the offset error.

The conversion cycle of a 7 (12) bit conversion is 2^8=256 (2^{13}=8192) clock cycles. Using the 32.768kHz RTC clock, the conversion cycle time is 7.8 (250) ms. LSB value is 45 (1.4) mV.

When the battery voltage falls below the Power On Reset threshold, or when the RESETN input is driven low, the battery voltage monitoring function is disabled.

Distributor of STMicroelectronics: Excellent Integrated System Limited
Datasheet of STW4102IQT - IC LI-ION BATT CHRGR DUAL 24QFN
Contact us: sales@integrated-circuit.com Website: www.integrated-circuit.com

9 Factory OTP options

Table 14 summarizes the one-time programming (OTP) options offered by STMicroelectronics to customize the STw4102 at factory level.

Table 14. Factory OTP options

Option	Configuration bits	Value
TRICKLE current (wall adapter charge only)	OTP_TC=0 (default) OTP_TC=1	60 mA 120 mA
TRICKLE threshold voltage	OTP_TV1, OTP_TV0 : 00 01 10 11 (default)	 2.3 V 2.5 V 2.7 V 2.9 V
MAIN input mode at powerup	OTP_SEL_DC_USB=0 (default) OTP_SEL_DC_USB=1	Wall adapter mode USB mode
Watchdog state at powerup	OTP_WD_ENA=0 OTP_WD_ENA=1 (default)	Disabled Enabled
Watchdog period at powerup	OTP_WD_TIME1, OTP_WD_TIME0 : 00 (default) 01 10 11	 1 min 15 min 30 min 60 min
Power switch	OPT_IEPD=0 (default) OPT_IEPD=1	Internal External
Sense resistor	OPT_IERSENSE=0 (default) OPT_IERSENSE=1	Internal External
LDO overvoltage protection	OPT_LDOEXT_PRO=0 OPT_LDOEXT_PRO=1 (default)	Disabled Enabled
I^2C ID address	OTP_ID2, OTP_ID1, OTP_ID0 : 000 (default) 001 010 011 100 101 110 111	 70h 71h 72h 73h 74h 75h 76h 77h

For any option request other than the standard configuration (default values), contact STMicroelectronics to get a specific order code.

Obsolete Product(s) - Obsolete Product(s)

Distributor of STMicroelectronics: Excellent Integrated System Limited
Datasheet of STW4102IQT - IC LI-ION BATT CHRGR DUAL 24QFN
Contact us: sales@integrated-circuit.com Website: www.integrated-circuit.com

10 I²C interface

10.1 Read and write operations

The I²C interface is used to control the charging and the gas gauge system. It is compatible with the I²C specification of Philips (version 2.1). It is a slave serial interface with a serial data line (SDA) and a serial clock line (SCL):

SCL: input clock used to shift data

SDA: input/output bi-directional data transfers

A filter rejects the potential spikes on the bus data line to preserve data integrity. The bi-directional data line supports transfers up to 400 kbit/s (fast-mode). The data is shifted into and from the chip on the SDA line, MSB first.

The first bit must be high (START), followed by the Device ID and Read/Write control bit (see *Table 15*). The AddrID0 to AddrID2 bits are factory programmable, their default ID value is 70h (AddrID0 = AddrID1 = AddrID2 = 0). Then, the STw4102 sends an acknowledge at the end of the 8-bit transmission.

The next 8 bits correspond to the address register, followed by another acknowledge. *Table 16* shows the address register format.

The data field is sent last. It can be composed of several 8-bit data registers, each followed by an acknowledge. *Table 17* shows the data register format.

The STw4102 supports byte read, word read, block read, and byte write operations. The transmission protocol is summarized in *Figure 24* and *Figure 25*.

Obsolete Product(s) - Obsolete Product(s)

Table 15. Device ID and R/W bit format

b7	b6	b5	b4	b3	b2	b1	b0
1	1	1	0	AddrID2	AddrID1	AddrID0	R/W

Table 16. Address register format

b7	b6	b5	b4	b3	b2	b1	b0
RegAddr7	RegAddr6	RegAddr5	RegAddr4	RegAddr3	RegAddr2	RegAddr1	RegAddr0

Table 17. Data register format

b7	b6	b5	b4	b3	b2	b1	b0
DATA7	DATA6	DATA5	DATA4	DATA3	DATA2	DATA1	DATA0

Figure 24. Byte, word and block read operation

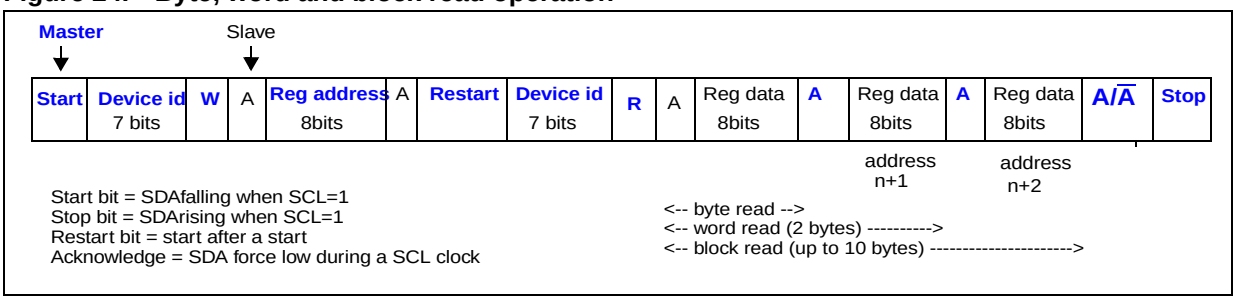

Distributor of STMicroelectronics: Excellent Integrated System Limited
Datasheet of STW4102IQT - IC LI-ION BATT CHRGR DUAL 24QFN
Contact us: sales@integrated-circuit.com Website: www.integrated-circuit.com

Figure 25. Byte write operation

Start	Device id 7 bits	W	A	Reg address 8bits	A	Reg data 8bits	A	Stop

Start bit = SDAfalling when SCL=1
Stop bit = SDArising when SCL=1
Restart bit = start after a start

10.2 Register mapping

The mapping of all registers is shown in *Table 18*. Individual register descriptions are shown in *Table 19* to *Table 35*. Power-up values are set at power startup, or at reset (RESETN pin falling edge). Charge and discharge internal accumulators are not affected by RESETN.

Table 18. Register mapping

Name	Address (dec.)	Description
REG_CHG0	0	Charge control and status
REG_CHG1	1	Charge enable
REG_WDOG	2	Watchdog control
REG_CG	3	Gas gauge control
REG_CHARGE_LOW	4	Gas gauge charge data, bits 0-7
REG_CHARGE_MID	5	Gas gauge charge data, bits 8-15
REG_CHARGE_HIGH	6	Gas gauge charge data, bits 16-23
REG_DISCHARGE_LOW	7	Gas gauge discharge data, bits 0-7
REG_DISCHARGE_MID	8	Gas gauge discharge data, bits 8-15
REG_DISCHARGE_HIGH	9	Gas gauge discharge data, bits 16-23
REG_CONVDATA_LOW	16	Gas gauge AD converter data, bits 0-7
REG_CONVDATA_HIGH	17	Gas gauge AD converter data, bits 8-12
REG_CONVNUMBER_LOW	18	Number of conversions, bits 0-7
REG_CONVNUMBER_HIGH	19	Number of conversions, bits 8-11
REG_ADCTRL	20	Battery voltage monitor control
REG_ADDATA_LOW	21	Battery voltage monitor AD converter data, bits 0-7
REG_ADDATA_HIGH	22	Battery voltage monitor AD converter data, bits 8-10

Obsolete Product(s) - Obsolete Product(s)

Distributor of STMicroelectronics: Excellent Integrated System Limited
Datasheet of STW4102IQT - IC LI-ION BATT CHRGR DUAL 24QFN
Contact us: sales@integrated-circuit.com Website: www.integrated-circuit.com

Table 19. REG_CHG0. address 0 (00h)

Name	Pos.	Type	Power-up	Description
CHARGERUN	0	R	0	0: Charge is below 10% of fast charge current. 1: Charge is above 10% of fast charge current.
MAINDETECT	1	R	0	Main input voltage detection.
USBDETECT	2	R	0	USB input voltage detection.
VCHG	[4,3]	R/W	00	Charge voltage 00=4.1V, 01=4.2V, 10=4.3V, 11=4.35V.
SEL_DC_USB	5	R/W	0	Wall adapter/USB selection for MAIN input 0: charge current set by Rset resistor 1: charge current set by USB_ICHG bits
USB_ICHG	[7,6]	R/W	00	USB charge current 00=60mA, 01=200mA, 10=400mA, 11=off.

Table 20. REG_CHG1. address 1 (01h)

Name	Pos.	Type	Power-up	Description
CHG_ENA	0	R/W	1	0: Charger disabled. 1: Charger enabled.
Reserved	[3,1]	R/W	0	Reserved bits, to be set to zero.
FORCECHARGERUN	4	R/W	0	0: no effect. 1: force EOCHG low independently of charge state.
SEL_IS	5	R/W	0	0: Internal supply from Main or USB input when available and charge enabled. 1: Internal supply always from Battery.
Unused	[7,6]	R/W		

Table 21. REG_WDOG. address 2 (02h)

Name	Pos.	Type	Power-up	Description
WDOG_EN	0	R/W	1	0: Watchdog disabled. 1: Watchdog enabled.
WDOG_TIME	[2,1]	R/W	00	00=1 minute, 01=15 minutes, 10=30 minutes, 11=60 minutes.
WDOG_RST	3	R/W	0	0: No effect. 1: Reset watchdog. Bit clear after watchdog reset.
Reserved	[5,4]	R/W	0	Reserved bits, to be set to zero
WDOG_INT	6	R	x	1: Watchdog is elapsed.
Unused	7	R/W		

Obsolete Product(s) - Obsolete Product(s)

Distributor of STMicroelectronics: Excellent Integrated System Limited
Datasheet of STW4102IQT - IC LI-ION BATT CHRGR DUAL 24QFN
Contact us: sales@integrated-circuit.com Website: www.integrated-circuit.com

Table 22. REG_CG. address 3 (03h)

Name	Pos.	Type	Power-up	Description
CG_ENA	0	R/W	0	0: Gas gauge disabled. Charge/discharge accumulators are reset. 1: Gas gauge enabled.
RST_CHRG	1	R/W	0	0: No effect. 1: Resets the charge accumulator. This bit auto clears after the charge register is reset.
RST_DCHRG	2	R/W	0	0: No effect. 1: Resets the discharge accumulator. This bit auto clears after the discharge register is reset.
RST_COUNTER	3	R/W	0	0: No effect. 1: Resets the counter conversion. This bit auto clears after the counter register is reset.
RD_REQ	4	R/W	0	0: No effect. 1: Transfers the 24 bit charge/discharge accumulators and the conversion counter to the charge/discharge and conversion number registers. This bit auto clears after the transfer.
CG_CAL	5	R/W	0	0: No effect. 1: Allows to calibrate AD converter.
CG_EOC	6	R	0	Set high at the end of a conversion. Cleared after read.
Unused	7	R/W		

Table 23. REG_CHARGE_LOW. address 4 (04h)

Name	Pos.	Type	Power-up	Description
DATA[7..0]	[7..0]	R	00	Current charge data.

Table 24. REG_CHARGE_MID. address 5 (05h)

Name	Pos.	Type	Power-up	Description
DATA[15..8]	[7..0]	R	00	Current charge data.

Table 25. REG_CHARGE_HIGH. address 6 (06h)

Name	Pos.	Type	Power-up	Description
DATA[23..16]	[7..0]	R	00	Current charge data.

Table 26. REG_DISCHARGE_LOW. address 7 (07h)

Name	Pos.	Type	Power-up	Description
DATA[7..0]	[7..0]	R	00	Current discharge data.

Obsolete Product(s) - Obsolete Product(s)

Distributor of STMicroelectronics: Excellent Integrated System Limited
Datasheet of STW4102IQT - IC LI-ION BATT CHRGR DUAL 24QFN
Contact us: sales@integrated-circuit.com Website: www.integrated-circuit.com

Table 27. REG_DISCHARGE_MID. address 8 (08h)

Name	Pos.	Type	Power-up	Description
DATA[15..8]	[7..0]	R	00	Current discharge data.

Table 28. REG_DISCHARGE_HIGH. address 9 (09h)

Name	Pos.	Type	Power-up	Description
DATA[23..16]	[7..0]	R	00	Current discharge data.

Table 29. REG_CONVDATA_LOW. address 16 (10h)

Name	Pos.	Type	Power-up	Description
DATA[7..0]	[7..0]	R	00	AD converter data.

Table 30. REG_CONVDATA_HIGH. address 17 (11h)

Name	Pos.	Type	Power-up	Description
DATA[12..8]	[4..0]	R	0	AD converter data.
Not used	[7..5]	R	0	

Table 31. REG_CONVNUMBER_LOW. address 18 (12h)

Name	Pos.	Type	Power-up	Description
DATA[7..0]	[7..0]	R	0	Number of conversions.

Table 32. REG_CONVNUMBER_HIGH. address 19 (13h)

Name	Pos.	Type	Power-up	Description
DATA[11..8]	[3..0]	R	0	Number of conversions.
Reserved	[7..4]	R	x	Reserved bits.

Obsolete Product(s) - Obsolete Product(s)

Distributor of STMicroelectronics: Excellent Integrated System Limited
Datasheet of STW4102IQT - IC LI-ION BATT CHRGR DUAL 24QFN
Contact us: sales@integrated-circuit.com Website: www.integrated-circuit.com

Table 33. REG_ADCTRL. address 20 (14h)

Name	Pos.	Type	Power-up	Description
ADPOWERON	0	R/W	0	0: Allows ADC shutdown. 1: Enables ADC operation.
ONSTATE	1	R	0	0: ADC is not ready for operation. 1: ADC is ready for operation.
ADSTART	2	R/W	0	0: No effect. 1: Allows to start a conversion. Cleared upon writing.
ADRUN	3	R	0	0: An AD conversion is not running. 1: An AD conversion is running.
ADRESOLUTION	4	R/W	0	0: 7 bits. 1: 12 bits.
ADCAL	5	R/W	0	0: No effect. 1: Allows to calibrate AD converter.
Not used	[7,6]	R	0	

Table 34. REG_ADDATA_LOW. address 21 (15h)

Name	Pos.	Type	Power-up	Description
DATA[7..0] DATA[6..0]	[7..0] [6..0]	R	00	AD converter data in 12 bit mode. AD converter data in 7 bit mode (bit7=0).

Table 35. REG_ADDATA_HIGH. address 22 (16h)

Name	Pos.	Type	Power-up	Description
DATA[11..8]	[3..0]	R	0	AD converter data in 12-bit mode (0 in 7-bit mode).
Not used	[7..4]	R	0	

Obsolete Product(s) - Obsolete Product(s)

Distributor of STMicroelectronics: Excellent Integrated System Limited
Datasheet of STW4102IQT - IC LI-ION BATT CHRGR DUAL 24QFN
Contact us: sales@integrated-circuit.com Website: www.integrated-circuit.com

11 Package information

In order to meet environmental requirements, STMicroelectronics offers these devices in ECOPACK® packages. These packages have a lead-free second level interconnect. The category of second level interconnect is marked on the package and on the inner box label, in compliance with JEDEC Standard JESD97. The maximum ratings related to soldering conditions are also marked on the inner box label. ECOPACK is an STMicroelectronics trademark. ECOPACK specifications are available at: www.st.com.

Table 36. QFN24 package mechanical data

Ref.	Dimensions					
	Millimeters			Inches		
	Typ.	Min.	Max.	Typ.	Min.	Max.
A		0.80	1.00			
A1		0.00	0.05			
A2	0.65		0.80			
D	4.00					
D1	3.75					
E	4.00					
E1	3.75					
Θ			12°			
P	0.42	0.24	0.60			
R	0.17	0.13	0.23			
e	0.50					
N	24.00					
Nd	6.00					
Ne	6.00					
L	0.40	0.30	0.50			
b		0.18	0.30			
Q	0.20		0.45			
D2	2.10	1.95	2.25			
E2	2.10	1.95	2.25			

Obsolete Product(s) - Obsolete Product(s)

Distributor of STMicroelectronics: Excellent Integrated System Limited
Datasheet of STW4102IQT - IC LI-ION BATT CHRGR DUAL 24QFN
Contact us: sales@integrated-circuit.com Website: www.integrated-circuit.com

Figure 26. QFN24 package mechanical drawing

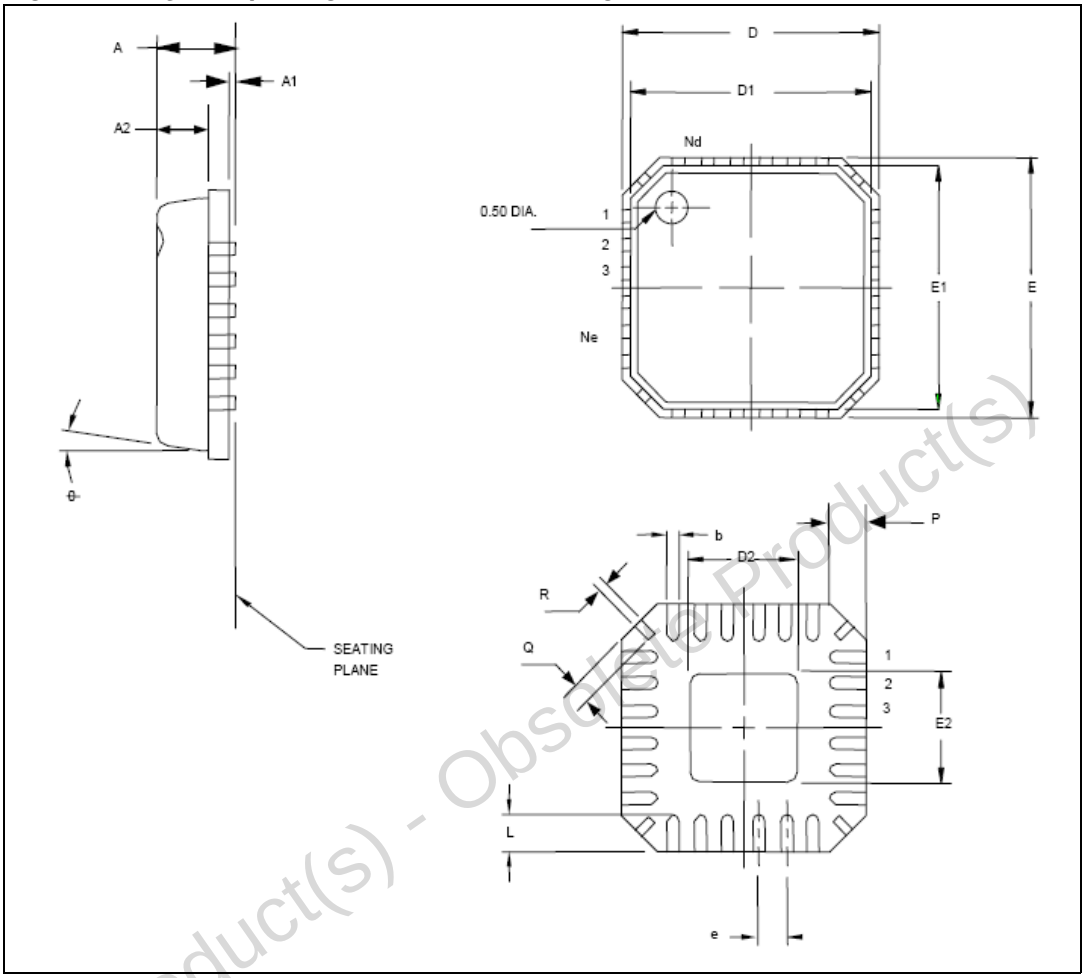

Figure 27. QFN24 footprint

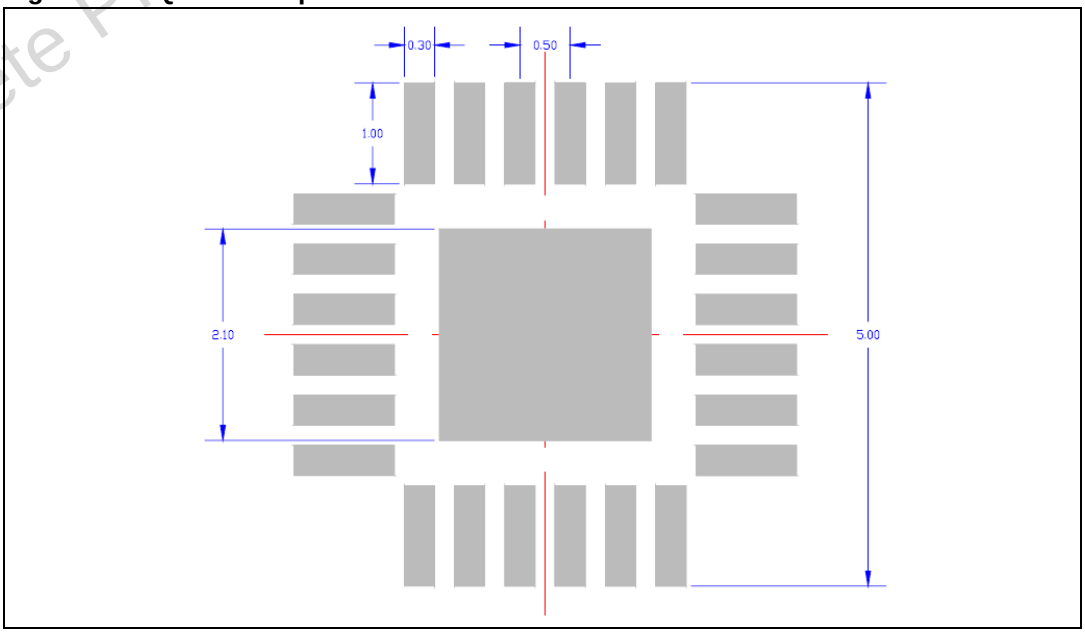

Obsolete Product(s) - Obsolete Product(s)

Distributor of STMicroelectronics: Excellent Integrated System Limited
Datasheet of STW4102IQT - IC LI-ION BATT CHRGR DUAL 24QFN
Contact us: sales@integrated-circuit.com Website: www.integrated-circuit.com

12 Ordering information

Table 37. Order code

Order code[1]	Temperature range	Package	Packaging	Marking
STw4102IQT	-30°C, +85°C	QFN24	Tape & reel	W4102I

1. Order code for parts with standard configuration. Contact STMicroelectronics to get order codes for parts with specific configurations.

13 Revision history

Table 38. Document revision history

Date	Revision	Changes
17-Mar-2008	1	Initial release (preliminary data).
20-Mar-2008	2	Document status promoted from preliminary data to datasheet.

Obsolete Product(s) - Obsolete Product(s)

Distributor of STMicroelectronics: Excellent Integrated System Limited
Datasheet of STW4102IQT - IC LI-ION BATT CHRGR DUAL 24QFN
Contact us: sales@integrated-circuit.com Website: www.integrated-circuit.com

Please Read Carefully:

Information in this document is provided solely in connection with ST products. STMicroelectronics NV and its subsidiaries ("ST") reserve the right to make changes, corrections, modifications or improvements, to this document, and the products and services described herein at any time, without notice.

All ST products are sold pursuant to ST's terms and conditions of sale.

Purchasers are solely responsible for the choice, selection and use of the ST products and services described herein, and ST assumes no liability whatsoever relating to the choice, selection or use of the ST products and services described herein.

No license, express or implied, by estoppel or otherwise, to any intellectual property rights is granted under this document. If any part of this document refers to any third party products or services it shall not be deemed a license grant by ST for the use of such third party products or services, or any intellectual property contained therein or considered as a warranty covering the use in any manner whatsoever of such third party products or services or any intellectual property contained therein.

UNLESS OTHERWISE SET FORTH IN ST'S TERMS AND CONDITIONS OF SALE ST DISCLAIMS ANY EXPRESS OR IMPLIED WARRANTY WITH RESPECT TO THE USE AND/OR SALE OF ST PRODUCTS INCLUDING WITHOUT LIMITATION IMPLIED WARRANTIES OF MERCHANTABILITY, FITNESS FOR A PARTICULAR PURPOSE (AND THEIR EQUIVALENTS UNDER THE LAWS OF ANY JURISDICTION), OR INFRINGEMENT OF ANY PATENT, COPYRIGHT OR OTHER INTELLECTUAL PROPERTY RIGHT.

UNLESS EXPRESSLY APPROVED IN WRITING BY AN AUTHORIZED ST REPRESENTATIVE, ST PRODUCTS ARE NOT RECOMMENDED, AUTHORIZED OR WARRANTED FOR USE IN MILITARY, AIR CRAFT, SPACE, LIFE SAVING, OR LIFE SUSTAINING APPLICATIONS, NOR IN PRODUCTS OR SYSTEMS WHERE FAILURE OR MALFUNCTION MAY RESULT IN PERSONAL INJURY, DEATH, OR SEVERE PROPERTY OR ENVIRONMENTAL DAMAGE. ST PRODUCTS WHICH ARE NOT SPECIFIED AS "AUTOMOTIVE GRADE" MAY ONLY BE USED IN AUTOMOTIVE APPLICATIONS AT USER'S OWN RISK.

Resale of ST products with provisions different from the statements and/or technical features set forth in this document shall immediately void any warranty granted by ST for the ST product or service described herein and shall not create or extend in any manner whatsoever, any liability of ST.

ST and the ST logo are trademarks or registered trademarks of ST in various countries.

Information in this document supersedes and replaces all information previously supplied.

The ST logo is a registered trademark of STMicroelectronics. All other names are the property of their respective owners.

© 2008 STMicroelectronics - All rights reserved

STMicroelectronics group of companies

Australia - Belgium - Brazil - Canada - China - Czech Republic - Finland - France - Germany - Hong Kong - India - Israel - Italy - Japan - Malaysia - Malta - Morocco - Singapore - Spain - Sweden - Switzerland - United Kingdom - United States of America

www.st.com

Obsolete Product(s) - Obsolete Product(s)