Excellent Integrated System Limited

Stocking Distributor

Click to view price, real time Inventory, Delivery & Lifecycle Information:

C&K Components
K5G4/6.5N AU

For any questions, you can email us directly:
sales@integrated-circuit.com

K5G Series
Snap Action Key Switch

Features/Benefits

- *Double stroke version*
- *Excellent tactile feel*
- *Low profile*
- *Quiet actuation*
- *RoHS compliant*

Typical Applications

- *Automotive*
  - *Window lift*
  - *Sun-roof control*
- *Multi-function devices*

Construction

FUNCTION: Momentary action
CONTACT ARRANGEMENT: 2 make contacts, SPST
TERMINALS: Gullwing type for SMT

Mechanical

OPERATING FORCE FIRST STROKE: 3.7 + 0,8 - 0,5N
OPERATING FORCE SECOND STROKE: 6.5 N + 0.8 - 0,5N
ELECTRICAL TRAVEL FIRST STROKE: 0,5 mm
ELECTRICAL TRAVEL SECOND STROKE: 0,85 mm
TOTAL TRAVEL: 1 mm
OPERATING LIFE: 30,000 actuations

Packaging

Switches are delivered on continuous tape, in reels of 500 pieces

NOTE: Specifications listed above are for switches with standard options.
For information on specific and custom switches, consult Customer Service Center.

	Gold	Silver
Electrical		
POWER MIN / MAX:	.02 VA / 1 VA	.02 VA / 1 VA
VOLTAGE MIN / MAX:	20 mVDC/50 VDC	20 mVDC/50 VDC
CURRENT MIN / MAX DC:	10µA / 100 mA	1 mA / 100 mA
CONTACT RESISTANCE:	≤ 100 mΩ	≤ 100 mΩ
INSULATION RESISTANCE:	≥ 1GΩ	≥ 1GΩ
BOUNCE TIME:	5 ms	5 ms
Environmental		
OPERATING TEMPERATURE:	-40˚C to +105˚C	-40˚C to +85˚C
STORAGE TEMPERATURE:	-50˚C to +125˚C	-50˚C to +95˚C

Process

SOLDERING: Lead Free reflow compatible in accordance with CEI 60068-2-58 and Nr. 8GD000004

Materials

CONTACTS:	Au over Ni-layer	Ag on Ni-layer
SOLDERING PINS:	Au	Ag
HOUSING: Thermoplastic UL 94 H-B		

How To Order

Our easy build-a-switch concept allows you to mix and match options to create the switch you need. To order, select desired option from each category and place it in the appropriate box.

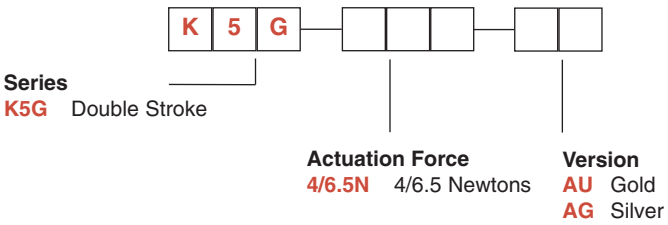

K5G Series
Snap Action Key Switch

K5G DOUBLE STROKE VERSION

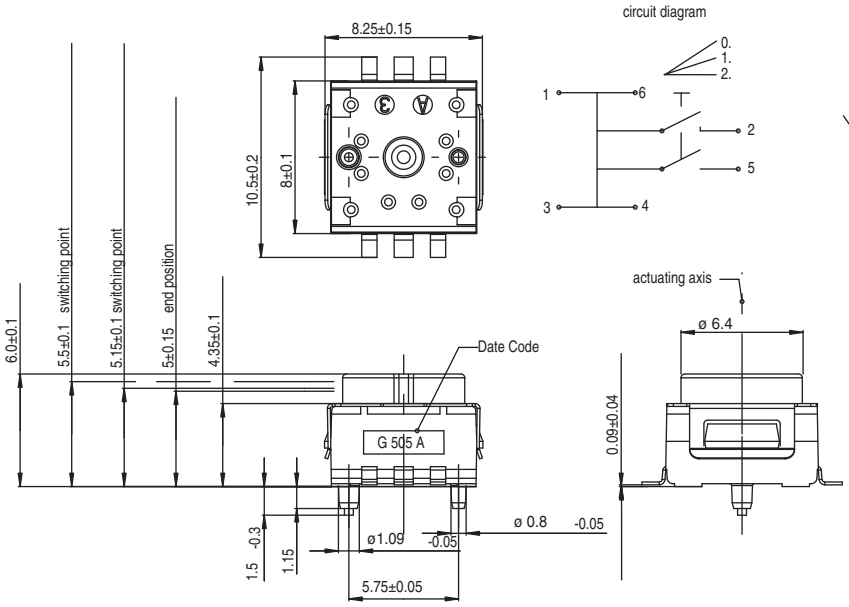

PCB LAYOUT, MOUNTING SIDE

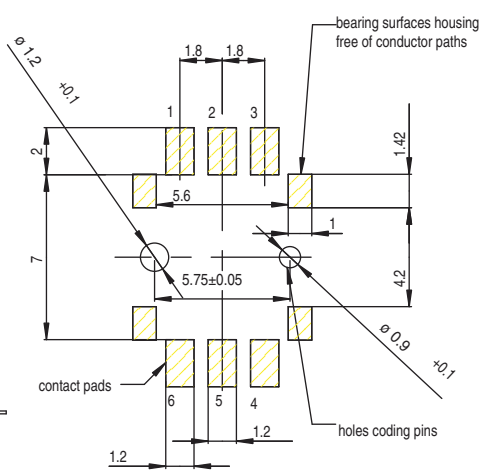

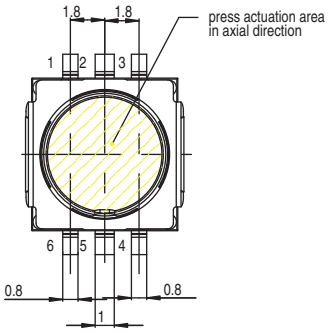

Tape and Reel

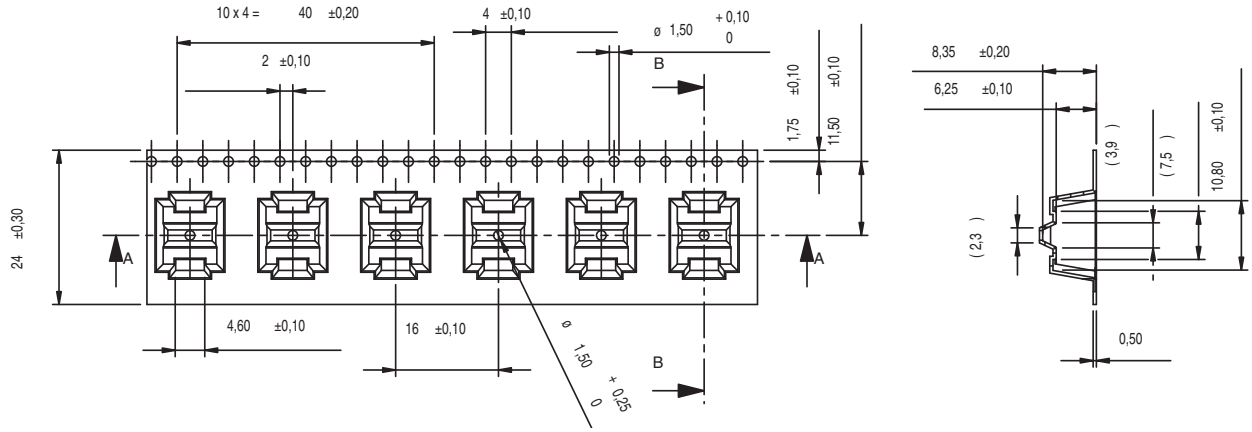

First Angle Projection

Dimensions are shown: mm (inch)
Specifications and dimensions subject to change