Excellent Integrated System Limited

Stocking Distributor

Click to view price, real time Inventory, Delivery & Lifecycle Information:

TE Connectivity AMP Connectors
1-1337537-0

For any questions, you can email us directly:
sales@integrated-circuit.com

Distributor of TE Connectivity AMP Connectors: Excellent Integrated System Limited
Datasheet of 1-1337537-0 - CONN BNC JACK STR 75 OHM SOLDER
Contact us: sales@integrated-circuit.com Website: www.integrated-circuit.com

THIS DRAWING IS UNPUBLISHED. RELEASED FOR PUBLICATION JAN ,2006.

© COPYRIGHT 2006 BY TYCO ELECTRONICS CORPORATION. ALL RIGHTS RESERVED.

LOC	DIST
E	B

REVISIONS

P	LTR	DESCRIPTION	DATE	DWN	APVD
	C	ECR-06-001518	26JAN06	JMS	FWK

NOTES:

1. PACK IN ACCORDANCE WITH AMP SPEC 107-3275
2. 100 TRAY PACK IN ACCORDANCE WITH AMP SPEC 107-3275
3. Au PLATING
4. Ni PLATING
5. HAND TOOL : 9-1478240-0
6. DIE SET : 9-1478245-0
7. ELECTRICAL CHARACTERISTICS
   - FREQUENCY RANGE: DC - 2 GHz
   - NOMINAL IMPEDANCE: 75 Ohm
   - INSULATION RESISTANCE: 5000 MOhm
   - WORKING VOLTAGE: 500 Volts RMS at Sea Level
   - DIELECTRIC WITHSTAND VOLTAGE: 1500 Volts RMS Max
   - CONTACT RESISTANCE:
   - CENTRE CONTACT: 1.50 mOhm Max
   - OUTER CONTACT: 0.20 mOhm Max
   - VSWR @ 2GHz: 1.20:1 Max
   - INSERTION LOSS dB @ x 2 GHz: 0.20 Max
8.
   - COUPLING RETENTION FORCE: N/A
   - CABLE RETENTION FORCE: 85N Min
   - DURABILITY: 500 Cycles Min
9. ENVIRONMENTAL CHARACTERISTICS
   - OPERATING TEMPERATURE: -65 to +165 DegC

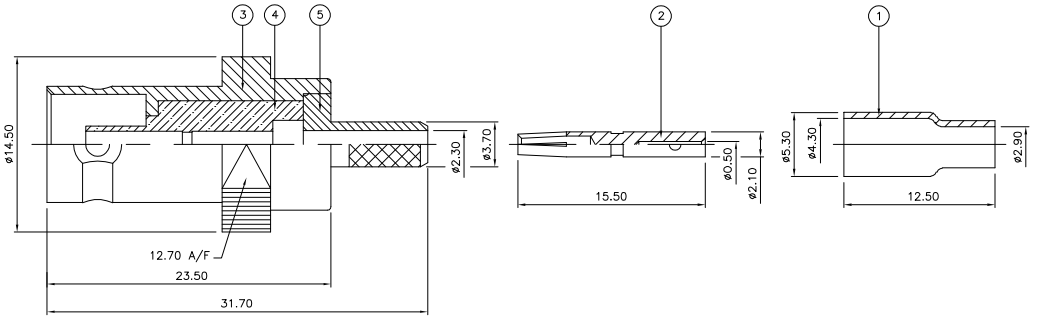

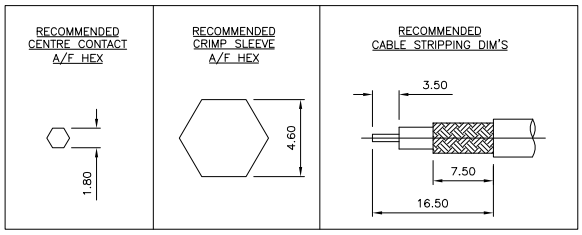

QUANTITY PER ASSY				PARTS LIST		
		1	1	BRASS (4)	CHASSIS	5
		1	1	PTFE	INSULATION	4
		1	1	BRASS (4)	BODY	3
		1	1	BRASS (3)	CONTACT	2
		1	1	BRASS (4)	FERRULE	1
		6--0	1--0	MATERIAL	DESCRIPTION	ITEM
		(2)	(1)			

THIS DRAWING IS A CONTROLLED DOCUMENT.

DIMENSIONS: mm

TOLERANCES UNLESS OTHERWISE SPECIFIED:
0 PLC ± -
1 PLC ± -
2 PLC ± -
3 PLC ± -
4 PLC ± -
ANGLES ± -

MATERIAL: SEE TABLE
FINISH: -

DWN J.SANDWELL 26JAN06
CHK S.PARLOW 26JAN06
APVD F.WHEELER-KING 26JAN06
PRODUCT SPEC -
APPLICATION SPEC 411-3247
WEIGHT -

tyco Electronics
Tyco Electronics Corporation
Bideford EX39 4HE

NAME: BNC STRAIGHT JACK CRIMP 75 OHM RG179B/U,187A/U,URM111 -

SIZE	CAGE CODE	DRAWING NO	RESTRICTED TO
A3	00779	C-1337537	-

CUSTOMER DRAWING | SCALE NTS | SHEET 1 OF 1 | REV C

AMP 1470-19 REV 31MAR2000