Excellent Integrated System Limited

Stocking Distributor

Click to view price, real time Inventory, Delivery & Lifecycle Information:

Texas Instruments
TRS207CDB

For any questions, you can email us directly:
sales@integrated-circuit.com

Distributor of Texas Instruments: Excellent Integrated System Limited
Datasheet of TRS207CDB - IC DVR/RCVR RS232 ESD DL 24SSOP
Contact us: sales@integrated-circuit.com Website: www.integrated-circuit.com

FEATURES

- **ESD Protection for RS-232 Bus Pins**
  - **±15-kV Human-Body Model (HBM)**
- **Meets or Exceeds the Requirements of TIA/EIA-232-F and ITU v.28 Standards**
- **Operates at 5-V V_{CC} Supply**
- **Operates up to 120 kbit/s**
- **External Capacitors . . . 4 × 0.1 µF**
- **Latch-Up Performance Exceeds 100 mA Per JESD 78, Class II**

DB OR DW PACKAGE
(TOP VIEW)

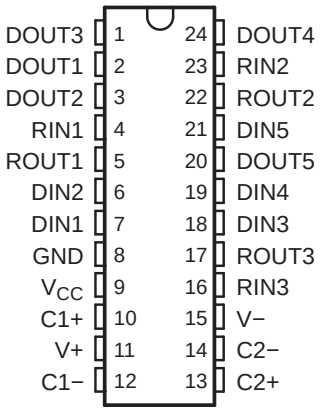

APPLICATIONS

- **Battery-Powered Systems**
- **PDAs**
- **Notebooks**
- **Laptops**
- **Palmtop PCs**
- **Hand-Held Equipment**

DESCRIPTION/ORDERING INFORMATION

The TRS207 consists of five line drivers, three line receivers, and a dual charge-pump circuit with ±15-kV ESD protection pin to pin (serial-port connection pins, including GND). The device meets the requirements of TIA/EIA-232-F and provides the electrical interface between an asynchronous communication controller and the serial-port connector. The charge pump and four small external capacitors allow operation from a single 5-V supply. The devices operate at data signaling rates up to 120 kbit/s and a maximum of 30-V/µs driver output slew rate.

ORDERING INFORMATION

T_A	PACKAGE(1)(2)		ORDERABLE PART NUMBER	TOP-SIDE MARKING
0°C to 70°C	SOIC – DW	Tube of 25	TRS207CDW	TRS207C
		Reel of 2000	TRS207CDWR	
	SSOP – DB	Reel of 2000	TRS207CDBR	RU07C
–40°C to 85°C	SOIC – DW	Tube of 25	TRS207IDW	TRS207I
		Reel of 2000	TRS207IDWR	
	SSOP – DB	Reel of 2000	TRS207IDBR	RU07I

(1) Package drawings, standard packing quantities, thermal data, symbolization, and PCB design guidelines are available at www.ti.com/sc/package.
(2) For the most current package and ordering information, see the Package Option Addendum at the end of this document, or see the TI Web site at www.ti.com.

Please be aware that an important notice concerning availability, standard warranty, and use in critical applications of Texas Instruments semiconductor products and disclaimers thereto appears at the end of this data sheet.

PRODUCTION DATA information is current as of publication date. Products conform to specifications per the terms of the Texas Instruments standard warranty. Production processing does not necessarily include testing of all parameters.

Copyright © 2007, Texas Instruments Incorporated

FUNCTION TABLES

Each Driver(1)

INPUT DIN	OUTPUT DOUT
L	H
H	L

(1) H = high level, L = low level

Each Receiver(1)

INPUT RIN	OUTPUT ROUT
L	H
H	L
Open	H

(1) H = high level, L = low level, Open = input disconnected or connected driver off

LOGIC DIAGRAM (POSITIVE LOGIC)

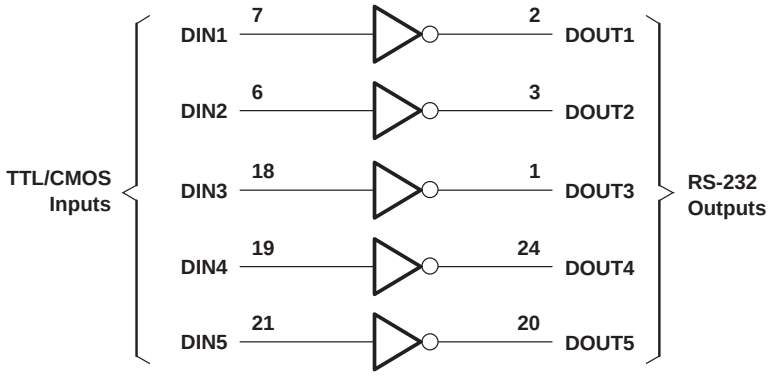

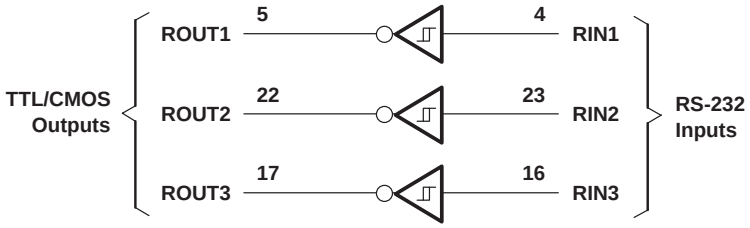

Distributor of Texas Instruments: Excellent Integrated System Limited
Datasheet of TRS207CDB - IC DVR/RCVR RS232 ESD DL 24SSOP
Contact us: sales@integrated-circuit.com Website: www.integrated-circuit.com

Absolute Maximum Ratings[1]

over operating free-air temperature range (unless otherwise noted)

			MIN	MAX	UNIT
V_{CC}	Supply voltage range[2]		–0.3	6	V
V+	Positive output supply voltage range[2]		V_{CC} – 0.3	14	V
V–	Negative output supply voltage range[2]		–14	0.3	V
V_I	Input voltage range	Drivers	–0.3	V+ + 0.3	V
		Receivers		±30	
V_O	Output voltage range	Drivers	V– – 0.3	V+ + 0.3	V
		Receivers	–0.3	V_{CC} + 0.3	
	Short-circuit duration	DOUT		Continuous	
θ_{JA}	Package thermal impedance[3][4]	DB package		63	°C/W
		DW package		46	
T_J	Operating virtual junction temperature			150	°C
T_{stg}	Storage temperature range		–65	150	°C

(1) Stresses beyond those listed under "absolute maximum ratings" may cause permanent damage to the device. These are stress ratings only, and functional operation of the device at these or any other conditions beyond those indicated under "recommended operating conditions" is not implied. Exposure to absolute-maximum-rated conditions for extended periods may affect device reliability.
(2) All voltages are with respect to network GND.
(3) Maximum power dissipation is a function of $T_J(max)$, θ_{JA}, and T_A. The maximum allowable power dissipation at any allowable ambient temperature is $P_D = (T_J(max) – T_A)/\theta_{JA}$. Operating at the absolute maximum T_J of 150°C can affect reliability.
(4) The package thermal impedance is calculated in accordance with JESD 51-7.

Recommended Operating Conditions[1]

See Figure 4

			MIN	NOM	MAX	UNIT
	Supply voltage		4.5	5	5.5	V
V_{IH}	Driver high-level input voltage	DIN	2			V
V_{IL}	Driver low-level input voltage	DIN			0.8	V
V_I	Driver input voltage	DIN	0		5.5	V
	Receiver input voltage		–30		30	
T_A	Operating free-air temperature	TRS207C	0		70	°C
		TRS207I	–40		85	

(1) Test conditions are C1–C4 = 0.1 µF at V_{CC} = 5 V ± 0.5 V.

Electrical Characteristics[1]

over recommended ranges of supply voltage (unless otherwise noted) (see Figure 4)

PARAMETER		TEST CONDITIONS			MIN	TYP	MAX	UNIT
I_{CC}	Supply current	No load,	V_{CC} = 5 V,	T_A = 25°C		11	20	mA

(1) Test conditions are C1–C4 = 0.1 µF at V_{CC} = 5 V ± 0.5 V.

DRIVER SECTION

Electrical Characteristics(1)

over recommended ranges of supply voltage and operating free-air temperature (unless otherwise noted) (see Figure 4)

PARAMETER		TEST CONDITIONS		MIN	TYP(2)	MAX	UNIT
V_{OH}	High-level output voltage	DOUT at R_L = 3 kΩ to GND,	DIN = GND	5	9		V
V_{OL}	Low-level output voltage	DOUT at R_L = 3 kΩ to GND,	DIN = V_{CC}	–5	–9		V
I_{IH}	High-level input current	$V_I = V_{CC}$			15	200	µA
I_{IL}	Low-level input current	V_I at 0 V			–15	–200	µA
I_{OS}(3)	Short-circuit output current	V_{CC} = 5.5 V,	V_O = 0 V		±10	±60	mA
r_o	Output resistance	V_{CC}, V+, and V– = 0 V,	V_O = ±2 V	300			Ω

(1) Test conditions are C1–C4 = 0.1 µF at V_{CC} = 5 V ± 0.5 V.
(2) All typical values are at V_{CC} = 5 V, and T_A = 25°C.
(3) Short-circuit durations should be controlled to prevent exceeding the device absolute power dissipation ratings, and not more than one output should be shorted at a time.

Switching Characteristics(1)

over recommended ranges of supply voltage and operating free-air temperature (unless otherwise noted) (see Figure 4)

PARAMETER		TEST CONDITIONS		MIN	TYP(2)	MAX	UNIT
	Maximum data rate	C_L = 50 pF to 1000 pF, One DOUT switching,	R_L = 3 kΩ to 7 kΩ, See Figure 1	120			kbit/s
$t_{PLH(D)}$	Propagation delay time, low- to high-level output	C_L = 2500 pF, All drivers loaded,	R_L = 3 kΩ, See Figure 1		2		µs
$t_{PHL(D)}$	Propagation delay time, high- to low-level output	C_L = 2500 pF, All drivers loaded,	R_L = 3 kΩ, See Figure 1		2		µs
$t_{sk(p)}$	Pulse skew(3)	C_L = 150 pF to 2500 pF, See Figure 2	R_L = 3 kΩ to 7 kΩ,		300		ns
SR(tr)	Slew rate, transition region (see Figure 1)	C_L = 50 pF to 1000 pF, V_{CC} = 5 V	R_L = 3 kΩ to 7 kΩ,	3	6	30	V/µs

(1) Test conditions are C1–C4 = 0.1 µF at V_{CC} = 5 V ± 0.5 V.
(2) All typical values are at V_{CC} = 5 V, and T_A = 25°C.
(3) Pulse skew is defined as $|t_{PLH} – t_{PHL}|$ of each channel of the same device.

ESD Protection

PIN	TEST CONDITIONS	TYP	UNIT
DOUT, RIN	Human-Body Model	±15	kV

RECEIVER SECTION

Electrical Characteristics[1]

over recommended ranges of supply voltage and operating free-air temperature (unless otherwise noted) (see Figure 4)

PARAMETER		TEST CONDITIONS		MIN	TYP[2]	MAX	UNIT
V_{OH}	High-level output voltage	I_{OH} = –1 mA		3.5	V_{CC} – 0.4		V
V_{OL}	Low-level output voltage	I_{OL} = 1.6 mA				0.4	V
V_{IT+}	Positive-going input threshold voltage	V_{CC} = 5 V,	T_A = 25°C		1.7	2.4	V
V_{IT-}	Negative-going input threshold voltage	V_{CC} = 5 V,	T_A = 25°C	0.8	1.2		V
V_{hys}	Input hysteresis (V_{IT+} – V_{IT-})			0.2	0.5	1	V
r_i	Input resistance	V_I = ±3 V to ±25 V		3	5	7	kΩ

(1) Test conditions are C1–C4 = 0.1 µF at V_{CC} = 5 V ± 0.5 V.
(2) All typical values are at V_{CC} = 5 V, and T_A = 25°C.

Switching Characteristics[1]

over recommended ranges of supply voltage and operating free-air temperature (unless otherwise noted) (see Figure 3)

PARAMETER		TEST CONDITIONS	MIN	TYP[2]	MAX	UNIT
t_{PLH}	Propagation delay time, low- to high-level output	C_L = 150 pF		0.5	10	µs
t_{PHL}	Propagation delay time, high- to low-level output			0.5	10	µs
$t_{sk(p)}$	Pulse skew[3]			300		ns

(1) Test conditions are C1–C4 = 0.1 µF at V_{CC} = 5 V ± 0.5 V.
(2) All typical values are at V_{CC} = 5 V, and T_A = 25°C.
(3) Pulse skew is defined as $|t_{PLH} – t_{PHL}|$ of each channel of the same device.

Distributor of Texas Instruments: Excellent Integrated System Limited
Datasheet of TRS207CDB - IC DVR/RCVR RS232 ESD DL 24SSOP
Contact us: sales@integrated-circuit.com Website: www.integrated-circuit.com

PARAMETER MEASUREMENT INFORMATION

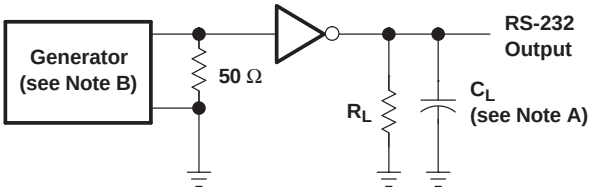

TEST CIRCUIT

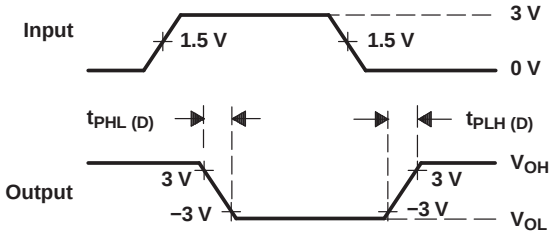

VOLTAGE WAVEFORMS

$$SR(tr) = \frac{6\ V}{t_{PHL\ (D)}\ \text{or}\ t_{PLH\ (D)}}$$

A. C_L includes probe and jig capacitance.

B. The pulse generator has the following characteristics: PRR = 120 kbit/s, Z_O = 50 Ω, 50% duty cycle, $t_r \leq 10$ ns, $t_f \leq 10$ ns.

Figure 1. Driver Slew Rate

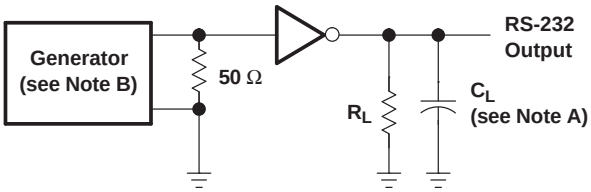

TEST CIRCUIT

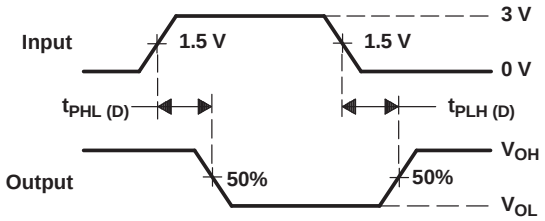

VOLTAGE WAVEFORMS

A. C_L includes probe and jig capacitance.

B. The pulse generator has the following characteristics: PRR = 120 kbit/s, Z_O = 50 Ω, 50% duty cycle, $t_r \leq 10$ ns, $t_f \leq 10$ ns.

Figure 2. Driver Pulse Skew

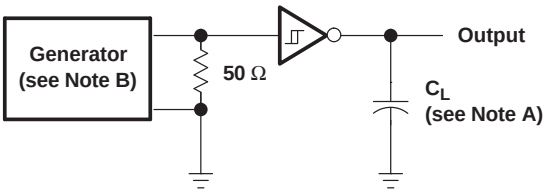

TEST CIRCUIT

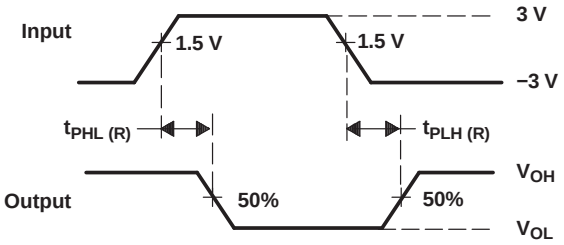

VOLTAGE WAVEFORMS

A. C_L includes probe and jig capacitance.

B. The pulse generator has the following characteristics: Z_O = 50 Ω, 50% duty cycle, $t_r \leq 10$ ns, $t_f \leq 10$ ns.

Figure 3. Receiver Propagation Delay Times

Distributor of Texas Instruments: Excellent Integrated System Limited
Datasheet of TRS207CDB - IC DVR/RCVR RS232 ESD DL 24SSOP
Contact us: sales@integrated-circuit.com Website: www.integrated-circuit.com

APPLICATION INFORMATION

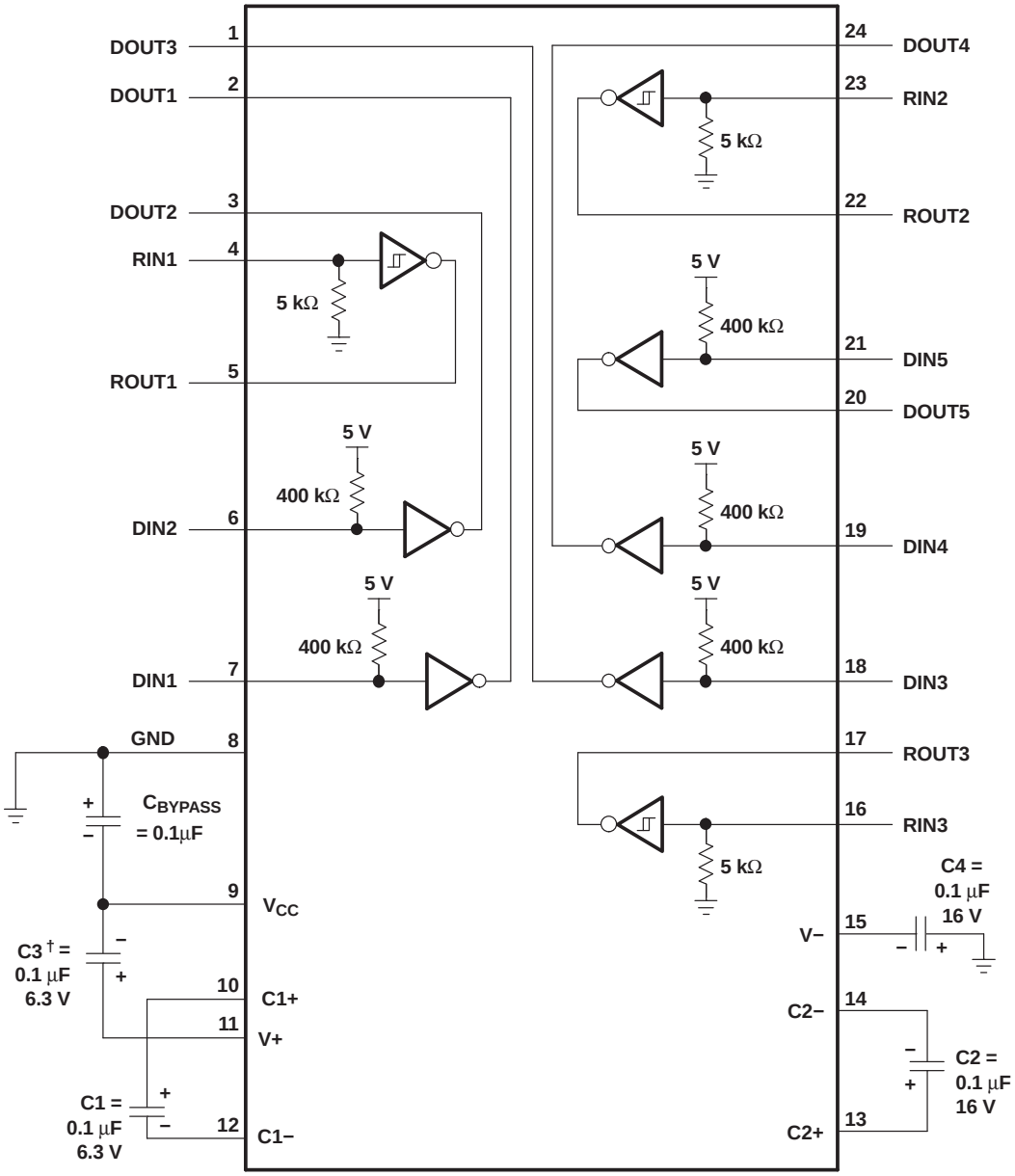

† C3 can be connected to V_{CC} or GND.

A. Resistor values shown are nominal.

B. Nonpolarized ceramic capacitors are acceptable. If polarized tantalum or electrolytic capacitors are used, they should be connected as shown.

Figure 4. Typical Operating Circuit and Capacitor Values

APPLICATION INFORMATION (continued)

Capacitor Selection

The capacitor type used for C1–C4 is not critical for proper operation. The TRS207 requires 0.1-µF capacitors, although capacitors up to 10 µF can be used without harm. Ceramic dielectrics are suggested for the 0.1-µF capacitors. When using the minimum recommended capacitor values, make sure the capacitance value does not degrade excessively as the operating temperature varies. If in doubt, use capacitors with a larger (e.g., 2×) nominal value. The capacitors' effective series resistance (ESR), which usually rises at low temperatures, influences the amount of ripple on V+ and V–.

Use larger capacitors (up to 10 µF) to reduce the output impedance at V+ and V–.

Bypass V_{CC} to ground with at least 0.1 µF. In applications sensitive to power-supply noise generated by the charge pumps, decouple V_{CC} to ground with a capacitor the same size as (or larger than) the charge-pump capacitors (C1–C4).

Electrostatic Discharge (ESD) Protection

TI TRS207 devices have standard ESD protection structures incorporated on the pins to protect against electrostatic discharges encountered during assembly and handling. In addition, the RS-232 bus pins (driver outputs and receiver inputs) of these devices have an extra level of ESD protection. Advanced ESD structures were designed to successfully protect these bus pins against ESD discharge of ±15-kV when powered down.

ESD Test Conditions

ESD testing is stringently performed by TI, based on various conditions and procedures. Please contact TI for a reliability report that documents test setup, methodology, and results.

Human-Body Model (HBM)

The HBM of ESD testing is shown in Figure 5, while Figure 6 shows the current waveform that is generated during a discharge into a low impedance. The model consists of a 100-pF capacitor, charged to the ESD voltage of concern, and subsequently discharged into the DUT through a 1.5-kΩ resistor.

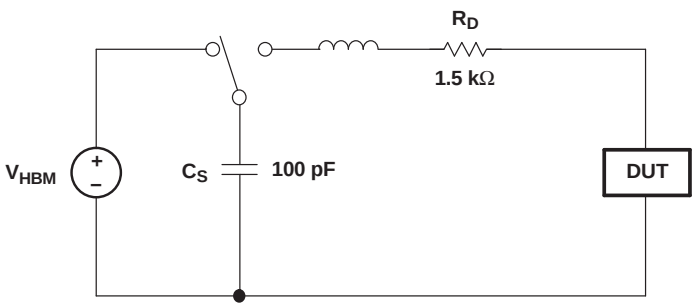

Figure 5. HBM ESD Test Circuit

APPLICATION INFORMATION (continued)

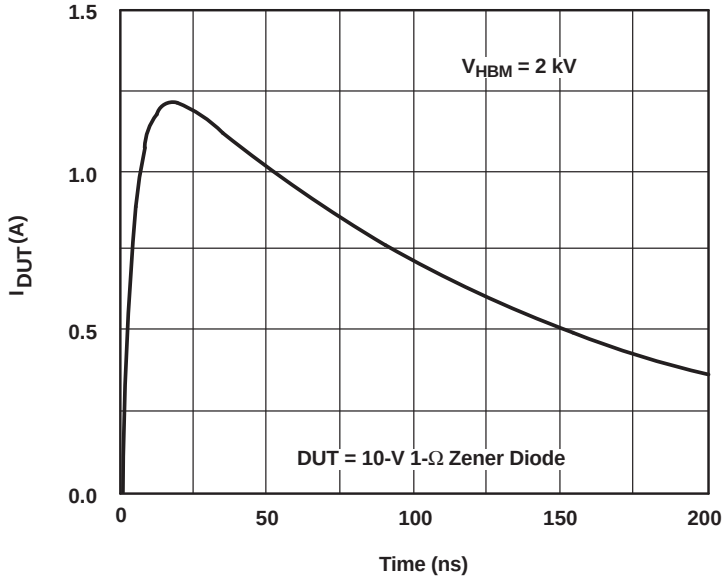

Figure 6. Typical HBM Current Waveform

Machine Model (MM)

The MM ESD test applies to all pins using a 200-pF capacitor with no discharge resistance. The purpose of the MM test is to simulate possible ESD conditions that can occur during the handling and assembly processes of manufacturing. In this case, ESD protection is required for all pins, not just RS-232 pins. However, after PC board assembly, the MM test is no longer as pertinent to the RS-232 pins.

Distributor of Texas Instruments: Excellent Integrated System Limited
Datasheet of TRS207CDB - IC DVR/RCVR RS232 ESD DL 24SSOP
Contact us: sales@integrated-circuit.com Website: www.integrated-circuit.com

PACKAGE OPTION ADDENDUM

PACKAGING INFORMATION

Orderable Device	Status (1)	Package Type	Package Drawing	Pins	Package Qty	Eco Plan (2)	Lead/Ball Finish (6)	MSL Peak Temp (3)	Op Temp (°C)	Device Marking (4/5)	Samples
TRS207CDBR	ACTIVE	SSOP	DB	24	2000	Green (RoHS & no Sb/Br)	CU NIPDAU	Level-1-260C-UNLIM	0 to 70	RU07C	Samples

(1) The marketing status values are defined as follows:
ACTIVE: Product device recommended for new designs.
LIFEBUY: TI has announced that the device will be discontinued, and a lifetime-buy period is in effect.
NRND: Not recommended for new designs. Device is in production to support existing customers, but TI does not recommend using this part in a new design.
PREVIEW: Device has been announced but is not in production. Samples may or may not be available.
OBSOLETE: TI has discontinued the production of the device.

(2) Eco Plan - The planned eco-friendly classification: Pb-Free (RoHS), Pb-Free (RoHS Exempt), or Green (RoHS & no Sb/Br) - please check http://www.ti.com/productcontent for the latest availability information and additional product content details.
TBD: The Pb-Free/Green conversion plan has not been defined.
Pb-Free (RoHS): TI's terms "Lead-Free" or "Pb-Free" mean semiconductor products that are compatible with the current RoHS requirements for all 6 substances, including the requirement that lead not exceed 0.1% by weight in homogeneous materials. Where designed to be soldered at high temperatures, TI Pb-Free products are suitable for use in specified lead-free processes.
Pb-Free (RoHS Exempt): This component has a RoHS exemption for either 1) lead-based flip-chip solder bumps used between the die and package, or 2) lead-based die adhesive used between the die and leadframe. The component is otherwise considered Pb-Free (RoHS compatible) as defined above.
Green (RoHS & no Sb/Br): TI defines "Green" to mean Pb-Free (RoHS compatible), and free of Bromine (Br) and Antimony (Sb) based flame retardants (Br or Sb do not exceed 0.1% by weight in homogeneous material)

(3) MSL, Peak Temp. - The Moisture Sensitivity Level rating according to the JEDEC industry standard classifications, and peak solder temperature.

(4) There may be additional marking, which relates to the logo, the lot trace code information, or the environmental category on the device.

(5) Multiple Device Markings will be inside parentheses. Only one Device Marking contained in parentheses and separated by a "~" will appear on a device. If a line is indented then it is a continuation of the previous line and the two combined represent the entire Device Marking for that device.

(6) Lead/Ball Finish - Orderable Devices may have multiple material finish options. Finish options are separated by a vertical ruled line. Lead/Ball Finish values may wrap to two lines if the finish value exceeds the maximum column width.

Important Information and Disclaimer: The information provided on this page represents TI's knowledge and belief as of the date that it is provided. TI bases its knowledge and belief on information provided by third parties, and makes no representation or warranty as to the accuracy of such information. Efforts are underway to better integrate information from third parties. TI has taken and continues to take reasonable steps to provide representative and accurate information but may not have conducted destructive testing or chemical analysis on incoming materials and chemicals. TI and TI suppliers consider certain information to be proprietary, and thus CAS numbers and other limited information may not be available for release.

In no event shall TI's liability arising out of such information exceed the total purchase price of the TI part(s) at issue in this document sold by TI to Customer on an annual basis.

Distributor of Texas Instruments: Excellent Integrated System Limited
Datasheet of TRS207CDB - IC DVR/RCVR RS232 ESD DL 24SSOP
Contact us: sales@integrated-circuit.com Website: www.integrated-circuit.com

PACKAGE MATERIALS INFORMATION

www.ti.com 14-Jul-2012

TAPE AND REEL INFORMATION

REEL DIMENSIONS

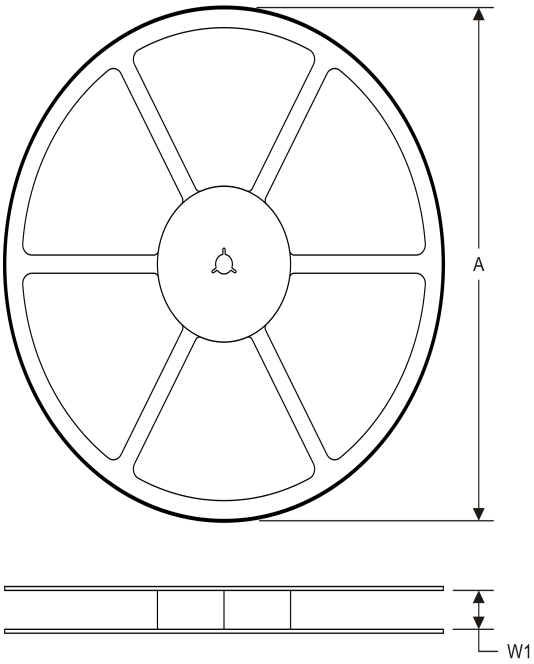

TAPE DIMENSIONS

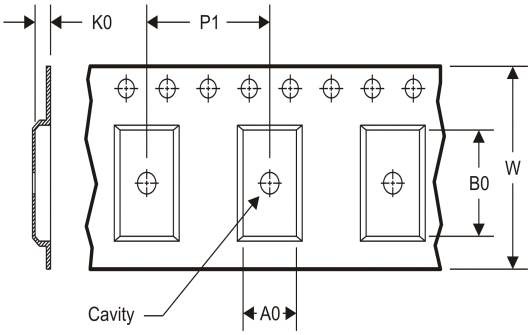

A0	Dimension designed to accommodate the component width
B0	Dimension designed to accommodate the component length
K0	Dimension designed to accommodate the component thickness
W	Overall width of the carrier tape
P1	Pitch between successive cavity centers

TAPE AND REEL INFORMATION

*All dimensions are nominal

Device	Package Type	Package Drawing	Pins	SPQ	Reel Diameter (mm)	Reel Width W1 (mm)	A0 (mm)	B0 (mm)	K0 (mm)	P1 (mm)	W (mm)	Pin1 Quadrant
TRS207CDBR	SSOP	DB	24	2000	330.0	16.4	8.2	8.8	2.5	12.0	16.0	Q1

PACKAGE MATERIALS INFORMATION

www.ti.com 14-Jul-2012

TAPE AND REEL BOX DIMENSIONS

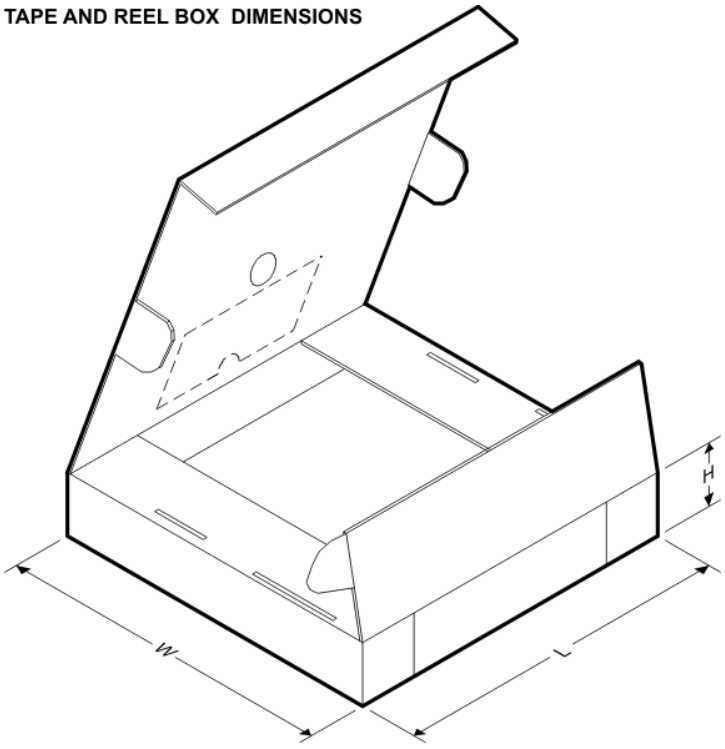

*All dimensions are nominal

Device	Package Type	Package Drawing	Pins	SPQ	Length (mm)	Width (mm)	Height (mm)
TRS207CDBR	SSOP	DB	24	2000	367.0	367.0	38.0

MECHANICAL DATA

MSSO002E – JANUARY 1995 – REVISED DECEMBER 2001

DB (R-PDSO-G)** **PLASTIC SMALL-OUTLINE**

28 PINS SHOWN

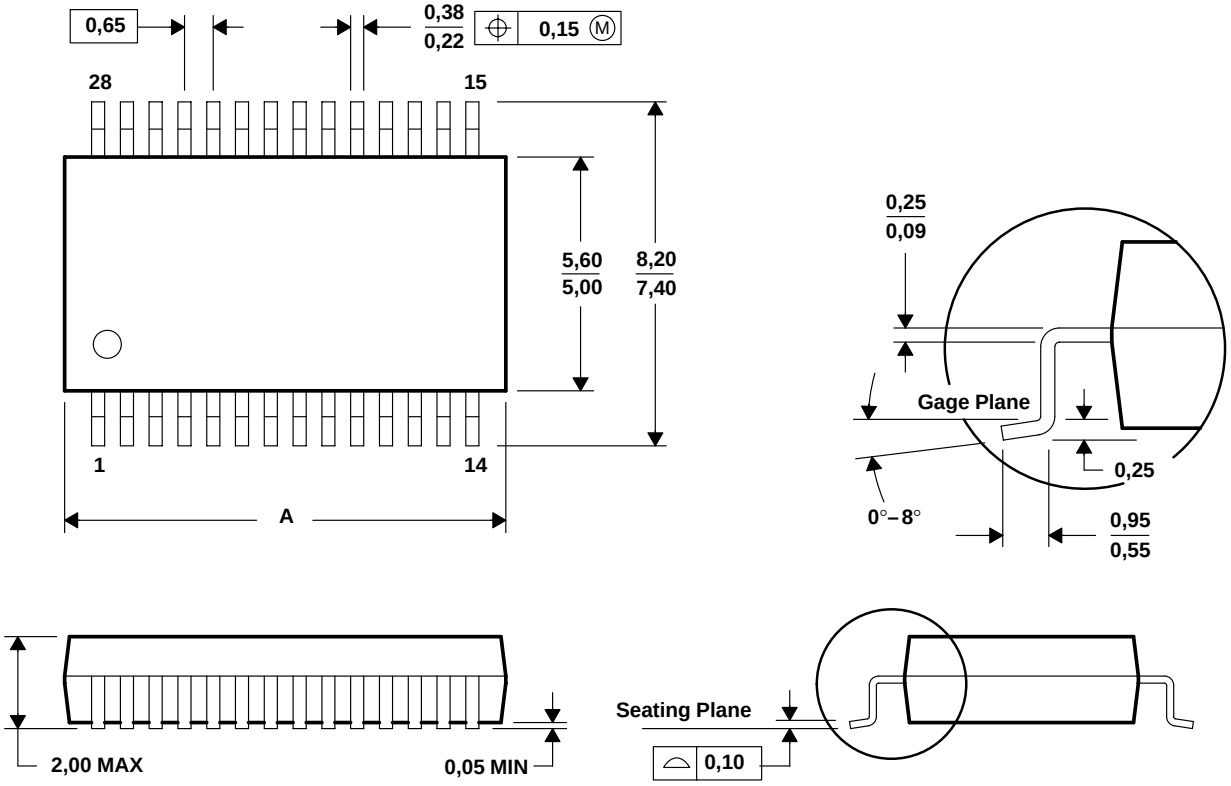

DIM \ PINS **	14	16	20	24	28	30	38
A MAX	6,50	6,50	7,50	8,50	10,50	10,50	12,90
A MIN	5,90	5,90	6,90	7,90	9,90	9,90	12,30

4040065 /E 12/01

NOTES:
A. All linear dimensions are in millimeters.
B. This drawing is subject to change without notice.
C. Body dimensions do not include mold flash or protrusion not to exceed 0,15.
D. Falls within JEDEC MO-150

IMPORTANT NOTICE

Texas Instruments Incorporated and its subsidiaries (TI) reserve the right to make corrections, enhancements, improvements and other changes to its semiconductor products and services per JESD46, latest issue, and to discontinue any product or service per JESD48, latest issue. Buyers should obtain the latest relevant information before placing orders and should verify that such information is current and complete. All semiconductor products (also referred to herein as "components") are sold subject to TI's terms and conditions of sale supplied at the time of order acknowledgment.

TI warrants performance of its components to the specifications applicable at the time of sale, in accordance with the warranty in TI's terms and conditions of sale of semiconductor products. Testing and other quality control techniques are used to the extent TI deems necessary to support this warranty. Except where mandated by applicable law, testing of all parameters of each component is not necessarily performed.

TI assumes no liability for applications assistance or the design of Buyers' products. Buyers are responsible for their products and applications using TI components. To minimize the risks associated with Buyers' products and applications, Buyers should provide adequate design and operating safeguards.

TI does not warrant or represent that any license, either express or implied, is granted under any patent right, copyright, mask work right, or other intellectual property right relating to any combination, machine, or process in which TI components or services are used. Information published by TI regarding third-party products or services does not constitute a license to use such products or services or a warranty or endorsement thereof. Use of such information may require a license from a third party under the patents or other intellectual property of the third party, or a license from TI under the patents or other intellectual property of TI.

Reproduction of significant portions of TI information in TI data books or data sheets is permissible only if reproduction is without alteration and is accompanied by all associated warranties, conditions, limitations, and notices. TI is not responsible or liable for such altered documentation. Information of third parties may be subject to additional restrictions.

Resale of TI components or services with statements different from or beyond the parameters stated by TI for that component or service voids all express and any implied warranties for the associated TI component or service and is an unfair and deceptive business practice. TI is not responsible or liable for any such statements.

Buyer acknowledges and agrees that it is solely responsible for compliance with all legal, regulatory and safety-related requirements concerning its products, and any use of TI components in its applications, notwithstanding any applications-related information or support that may be provided by TI. Buyer represents and agrees that it has all the necessary expertise to create and implement safeguards which anticipate dangerous consequences of failures, monitor failures and their consequences, lessen the likelihood of failures that might cause harm and take appropriate remedial actions. Buyer will fully indemnify TI and its representatives against any damages arising out of the use of any TI components in safety-critical applications.

In some cases, TI components may be promoted specifically to facilitate safety-related applications. With such components, TI's goal is to help enable customers to design and create their own end-product solutions that meet applicable functional safety standards and requirements. Nonetheless, such components are subject to these terms.

No TI components are authorized for use in FDA Class III (or similar life-critical medical equipment) unless authorized officers of the parties have executed a special agreement specifically governing such use.

Only those TI components which TI has specifically designated as military grade or "enhanced plastic" are designed and intended for use in military/aerospace applications or environments. Buyer acknowledges and agrees that any military or aerospace use of TI components which have ***not*** been so designated is solely at the Buyer's risk, and that Buyer is solely responsible for compliance with all legal and regulatory requirements in connection with such use.

TI has specifically designated certain components as meeting ISO/TS16949 requirements, mainly for automotive use. In any case of use of non-designated products, TI will not be responsible for any failure to meet ISO/TS16949.

Products		**Applications**	
Audio	www.ti.com/audio	Automotive and Transportation	www.ti.com/automotive
Amplifiers	amplifier.ti.com	Communications and Telecom	www.ti.com/communications
Data Converters	dataconverter.ti.com	Computers and Peripherals	www.ti.com/computers
DLP® Products	www.dlp.com	Consumer Electronics	www.ti.com/consumer-apps
DSP	dsp.ti.com	Energy and Lighting	www.ti.com/energy
Clocks and Timers	www.ti.com/clocks	Industrial	www.ti.com/industrial
Interface	interface.ti.com	Medical	www.ti.com/medical
Logic	logic.ti.com	Security	www.ti.com/security
Power Mgmt	power.ti.com	Space, Avionics and Defense	www.ti.com/space-avionics-defense
Microcontrollers	microcontroller.ti.com	Video and Imaging	www.ti.com/video
RFID	www.ti-rfid.com		
OMAP Applications Processors	www.ti.com/omap	**TI E2E Community**	e2e.ti.com
Wireless Connectivity	www.ti.com/wirelessconnectivity		

Mailing Address: Texas Instruments, Post Office Box 655303, Dallas, Texas 75265
Copyright © 2014, Texas Instruments Incorporated