Excellent Integrated System Limited

Stocking Distributor

Click to view price, real time Inventory, Delivery & Lifecycle Information:

Molex Connector Corporation
0532540270

For any questions, you can email us directly:
sales@integrated-circuit.com

Distributor of Molex Connector Corporation: Excellent Integrated System Limited
Datasheet of 0532540270 - CONN HEADER 2POS 2MM RT ANG TIN
Contact us: sales@integrated-circuit.com Website: www.integrated-circuit.com

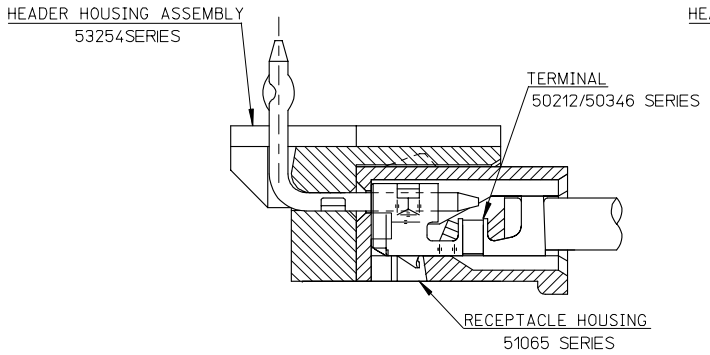

51065シリーズ/53254シリーズ　嵌合状態図　参考
51065 SERIES/53254 SERIES MATED DRAWING (REF.)

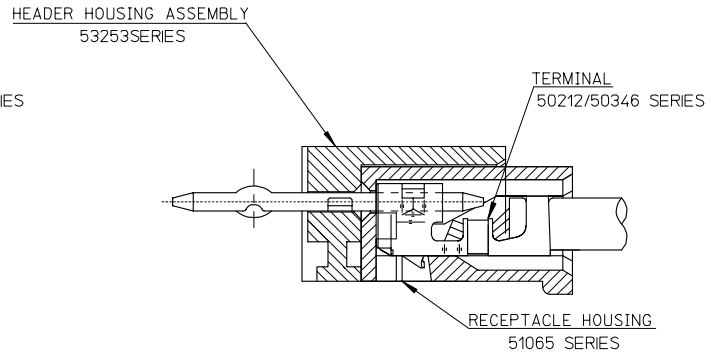

51065シリーズ/53253シリーズ　嵌合状態図　参考
51065 SERIES/53253 SERIES MATED DRAWING (REF.)

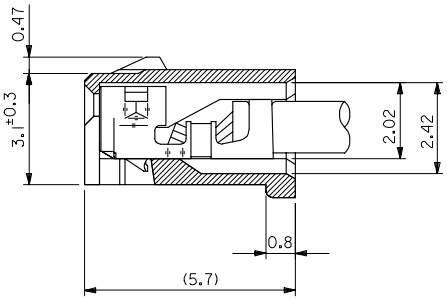

ターミナル装着状態図
TERMINAL ASS'Y DWG.

RELEASED EC NO: J2008-2041 DRWN:YAOYAGI CH'KD:THARUYAMA APPR:NUKITA	2007/11/21 2007/11/22 2007/11/22	DESCRIPTION	GENERAL TOLERANCES (UNLESS SPECIFIED)
			10 UNDER ±0.2
			10 OVER 30 UNDER ±0.25
			30 OVER ±0.3
			ANGULAR ±1 °
0		REV	DRAFT WHERE APPLICABLE MUST REMAIN WITHIN DIMENSIONS

DIMENSION STYLE MM ONLY	SCALE 10:1	DESIGN UNITS METRIC	THIRD ANGLE PROJECTION
DRAWN BY Y.AOYAGI DATE 2007/11/13	TITLE NEW 2.0 W/B CONN. 51065/532530R51065/53254		
CHECKED BY N.UKITA DATE 2007/11/13			
APPROVED BY N.UKITA DATE 2007/11/13	molex MOLEX INCORPORATED		
MATERIAL NO. SEE TABLE	DOCUMENT NO. SD-51065-006	SHEET NO. 1 OF 1	
SIZE A3	THIS DRAWING CONTAINS INFORMATION THAT IS PROPRIETARY TO MOLEX INCORPORATED AND SHOULD NOT BE USED WITHOUT WRITTEN PERMISSION		

tb_frame_A3_J_ME_S Rev. E 2006/04/15

EN-02JA(021)

Distributor of Molex Connector Corporation: Excellent Integrated System Limited
Datasheet of 0532540270 - CONN HEADER 2POS 2MM RT ANG TIN
Contact us: sales@integrated-circuit.com Website: www.integrated-circuit.com

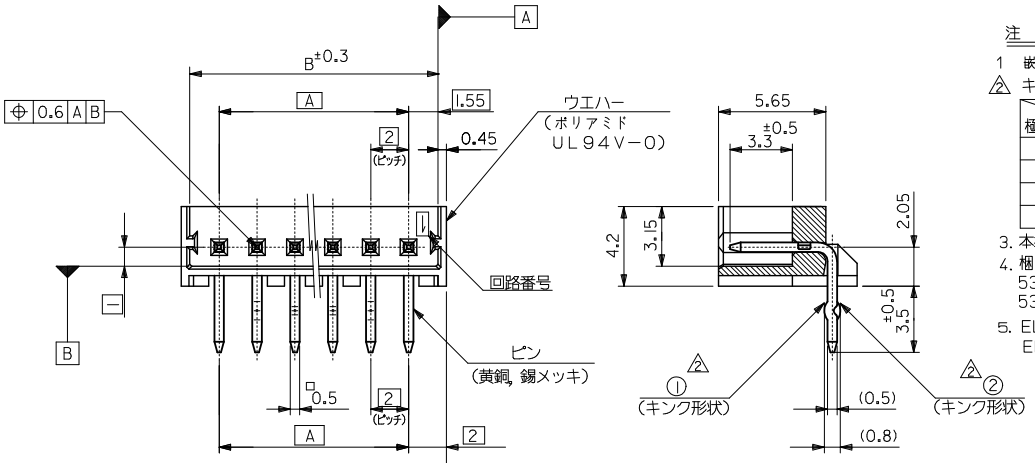

注　記

1　嵌合相手：51065シリーズ

2　キンクは下記表の位置及び形状に付加のこと。2極はキンク無し。

極数＼回路番号	1	2	3	4	5	N-2	N-1	N
6極以上	—	①	②	—	—	②	①	—
5極	①	②	—	②	①			
4極	①	②	②	①				
3極	①	②	①					

3. 本製品は、53254-**10の鉛フリー品です。
4. 梱包仕様 PACKAGING
   53254-**70 トレー TRAY
   53254-**50 ポリ袋 POLYBAG
5. ELV 及び RoHS 適合品
   ELV AND RoHS COMPLIANT

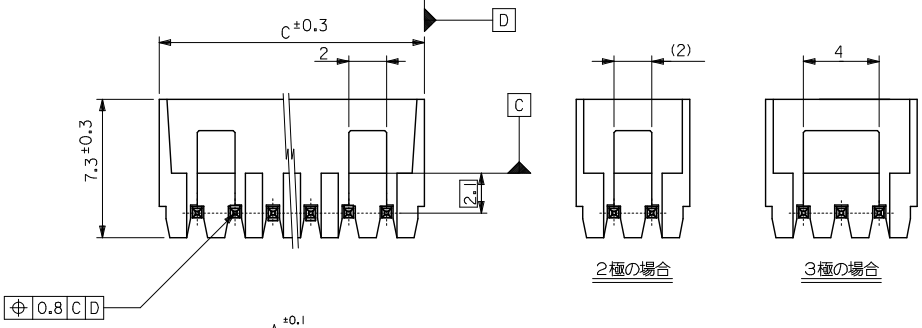

32	31.1	28	53254-1550	53254-1570	15
30	29.1	26	-1450	-1470	14
28	27.1	24	-1350	-1370	13
26	25.1	22	-1250	-1270	12
24	23.1	20	-1150	-1170	11
22	21.1	18	-1050	-1070	10
20	19.1	16	-0950	-0970	9
18	17.1	14	-0850	-0870	8
16	15.1	12	-0750	-0770	7
14	13.1	10	-0650	-0670	6
12	11.1	8	-0550	-0570	5
10	9.1	6	-0450	-0470	4
8	7.1	4	-0350	-0370	3
6	5.1	2	53254-0250	53254-0270	2
C	B	A	MATERIAL NO.	MATERIAL NO.	極数
			MODEL NO.	53254-**70/**50	

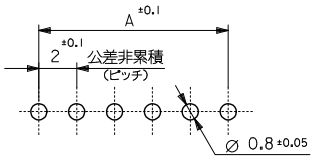

基板取付穴寸法（参考）
（t＝1．6）

REV	DESCRIPTION		
D	REVICED EC NO: J2014-0578	DRWN:YWAKE	2013/09/27
		CHKD:KASAKAWA	2013/09/27
		APPR:NUKITA	2013/10/02

GENERAL TOLERANCES (UNLESS SPECIFIED)

10 UNDER	±0.2
10 OVER 30 UNDER	±0.25
30 OVER	±0.3
ANGULAR	±3 °

DRAFT WHERE APPLICABLE MUST REMAIN WITHIN DIMENSIONS

DIMENSION STYLE: MM ONLY	SCALE: 5:1	DESIGN UNITS: METRIC	THIRD ANGLE PROJECTION
DRAWN BY: TTSUBOI	DATE: '04/01/15	TITLE: NEW 2.0 WIRE TO BOARD CONN. WAFER ASSY R/A -LEAD FREE-	
CHECKED BY: SMARUYAM	DATE: '04/01/15		
APPROVED BY: MSASAO	DATE: '04/01/15	molex	
MATERIAL NO.: SEE CHART	DOCUMENT NO.: SD-53254-001	SHEET NO.: 1 OF 1	
SIZE: A3	THIS DRAWING CONTAINS INFORMATION THAT IS PROPRIETARY TO MOLEX INCORPORATED AND SHOULD NOT BE USED WITHOUT WRITTEN PERMISSION		

tb_frame_A3_J_ME_S
Rev G 2012/01/25