Excellent Integrated System Limited

Stocking Distributor

Click to view price, real time Inventory, Delivery & Lifecycle Information:

Nuvoton Technology Corporation America
ISD-COB1916

For any questions, you can email us directly:
sales@integrated-circuit.com

ISD1900 Series ChipCorder

Nuvoton?s ISD1900 ChipCorder? is the newest single-chip multiple-message record/playback series with dual operating modes (address trigger and direct trigger) and wider operating voltage ranging from 2.4V to 5.5V. The sampling frequency can be selected from 4 to 12 kHz via an external resistor, which also determines the duration from 10.6 to 32 seconds. These ICs are designed mostly for standalone applications, and of course, it can be used in conjunction with a microcontroller, if necessary.

The two operating modes are address trigger and direct trigger. While in address trigger mode, both record and playback operations are manipulated according to the start address and end address specified through the start address and end address pins. However, in direct trigger mode, the device can configure the memory up to as many as eight equal messages, pending upon the fixed message configuration settings. With the record or playback feature being pre-selected, each message can be randomly accessed via its message control pin.

The device has a selectable differential microphone input with AGC feature or single-ended analog input, AnaIn, under feed-through mode. Its differential Class D PWM speaker driver can directly drive a typical speaker or buzzer.

Block Diagram

Related li

Block Diagram
Application Dia
Product Selecti
Datasheet
How to Buy

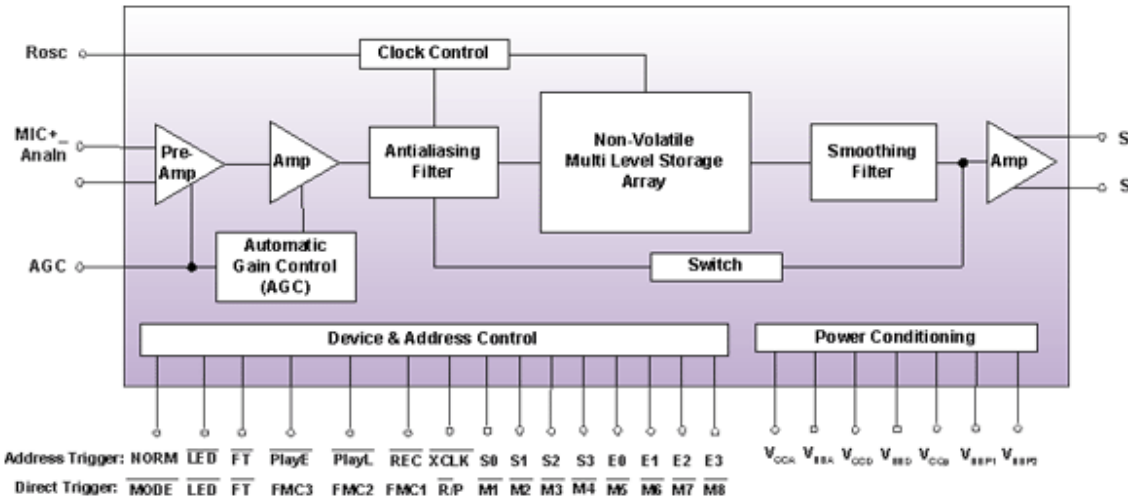

Application Diagram

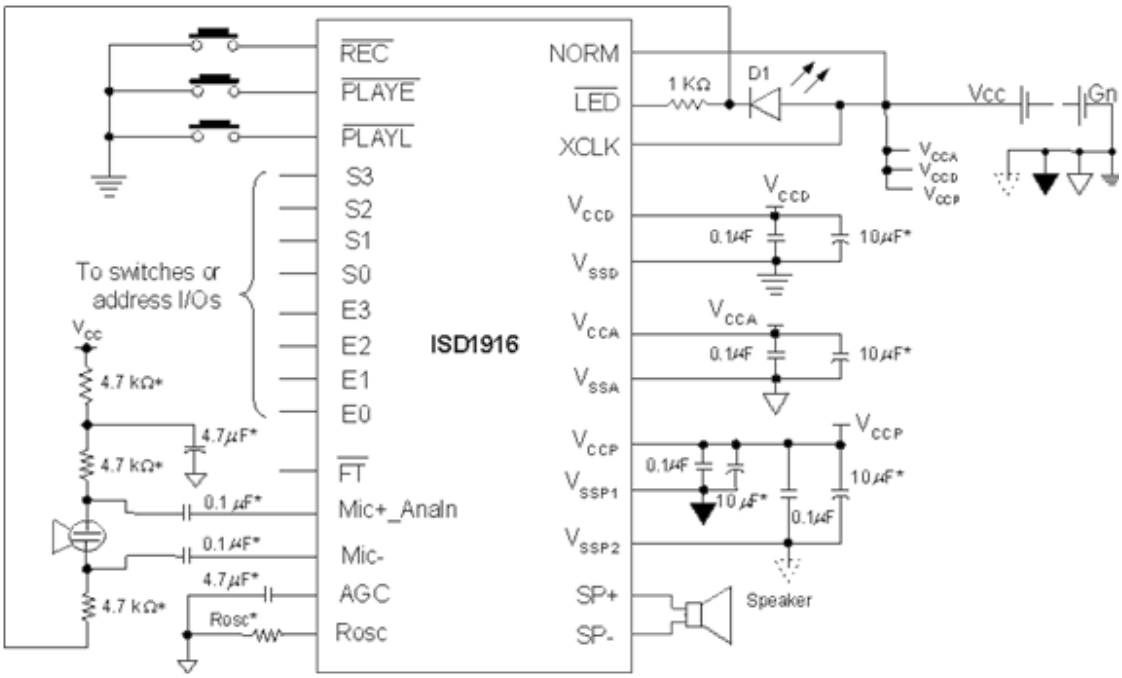

Features

Wider operating voltage from 2.4 to 5.5V
Higher sampling frequency from 4kHz to 12kHz
FT: converts MIC+ to ANAIN & feeds it to the speakers
R/P: record/playback switch
REC: level or edge recording
PLAYE : edge-trigger, toggle on/off
PLAYL : level playback or looping playback
LED : LED output for recording
NORM (Address Trigger): variable message duration

$\overline{\text{MODE}}$: (Direct Trigger): fixed message duration

Product Selection Guide

Part Number	Duration	Sample Rate	Package	Eval Sy
ISD1916	10.6 - 32 sec.	4.0 / 5.3/ 6.4 / 8.0 / 12.0	SOIC	ISD-
ISD1932	21.2 - 64 sec.	4.0 / 5.3/ 6.4 / 8.0 / 12.0	SOIC	ISD-
ISD1964	42.4 - 128 sec.	4.0 / 5.3/ 6.4 / 8.0 / 12.0	SOIC	ISD-

Legal Terms and Conditions | **Privacy Statement** | **Contact Us**
©2008 Nuvoton Technology Corporation America - All Rights Reser