Excellent Integrated System Limited

Stocking Distributor

Click to view price, real time Inventory, Delivery & Lifecycle Information:

Amphenol RF
262118

For any questions, you can email us directly:
sales@integrated-circuit.com

Distributor of Amphenol RF: Excellent Integrated System Limited
Datasheet of 262118 - CONN MMCX JACK STR 50 OHM SOLDER
Contact us: sales@integrated-circuit.com Website: www.integrated-circuit.com

REV.	DATE	DESCRIPTION
NC	04/29/99	INITIAL RELEASE
A	05/01/04	UPDATE DRAWING FORMAT

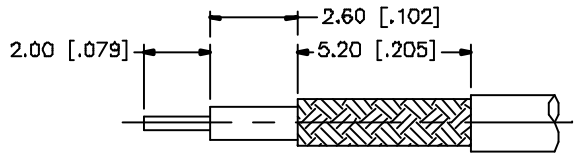

RECOMMENDED CABLE
STRIPPING DIM'S.

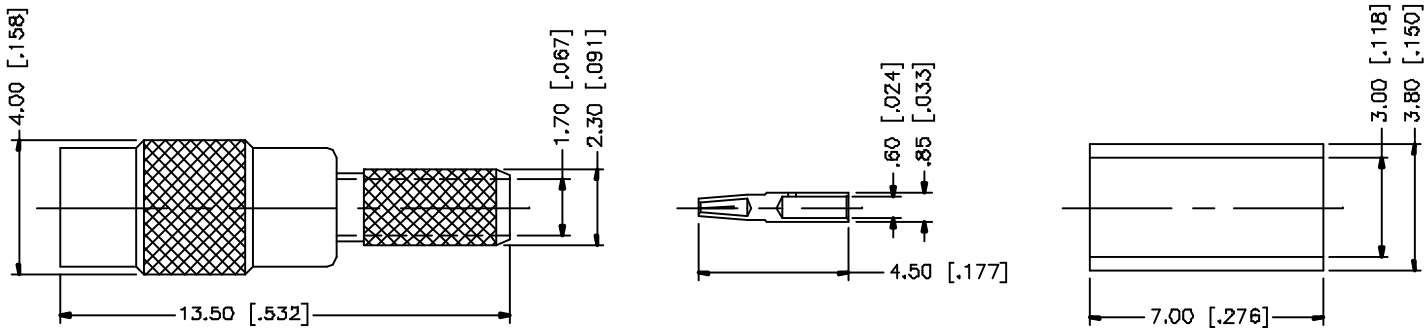

NOTE:

1. CRIMPED FERRULE
   HEX. CRIMP SIZE .128"
2. CONTACT PIN TO SOLDER.

	DESCRIPTION	MATERIAL	FINISH	QTY
8				
7				
6				
5	FERRULE	COPPER	GOLD	1
4	BARREL	BRASS	GOLD	1
3	CONTACT PIN	BER. COPPER	GOLD	1
2	INSULATOR	TEFLON	NATURAL	1
1	BODY	BRASS	GOLD	1

UNLESS OTHERWISE SPECIFIED DIMENSIONS ARE IN MILLIMETERS. DIMENSIONS IN [ ] ARE IN INCHES AND FOR CUSTOMER REFERENCE ONLY.

UNLESS OTHERWISE SPECIFIED TOLERANCES FOR MILLIMETERS ARE:
0.5 – 8mm ± 0.20mm
8 – 30mm ± 0.40mm
30 – 120mm ± 0.50mm

UNLESS OTHERWISE SPECIFIED TOLERANCES FOR INCHES ARE:
.020 – .315 = ± 0.007"
.315 – 1.180 = ± 0.015"
1.180 – 4.724 = ± 0.020"

DO NOT SCALE DRAWING

APPROVALS		DATE
DRAWN	G.R.S.	05/01/04
CHECKED		
ISSUED		
SHEET	1 OF 1	

CAD FILE C:/262/262118.DWG

Amphenol Connex

PART DESCRIPTION
MMCX CRIMP JACK
(FOR RG-174/U,188A/U,316/U)

PART NO. 262118

DWG. NO. 262118.DWG | REV. A | SIZE A | SCALE NA