Excellent Integrated System Limited

Stocking Distributor

Click to view price, real time Inventory, Delivery & Lifecycle Information:

NorComp
112-014-113-001

For any questions, you can email us directly:
sales@integrated-circuit.com

DESCRIPTION: .085" RIBBON R/A BOARD MOUNT

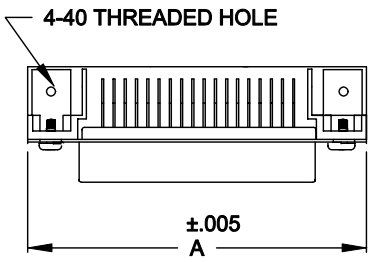

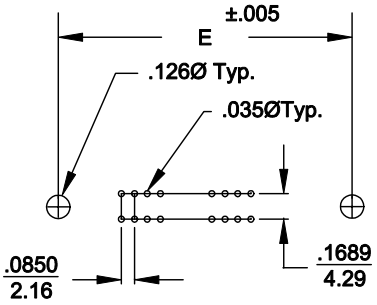

	A	B	C	D	E
14	1.720	1.008	.984	.618	1.417
	43.70	25.60	25.00	15.70	35.99
24	2.146	1.436	.984	.618	1.843
	54.50	36.47	25.00	15.70	46.79
36	2.662	1.943	.984	.618	2.352
	67.60	49.35	25.00	15.70	59.74
50	3.260	2.539	.984	.618	2.947
	82.80	64.47	25.00	15.70	74.85

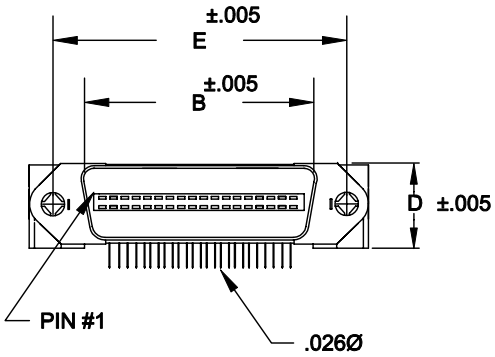

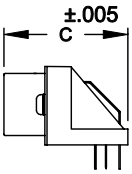

112-XXX-113-001

SERIES
POSITIONS
014
024
036
050

GENDER
1 = MALE

TERMINATION
1 = DIP SOLDER

SHELL PLATING
3 = NICKEL

HARDWARE OPTIONS
00 = 4-40 THREAD (PCB)

PLATING OPTIONS
01 = GOLD FLASH

MATERIALS:

INSULATOR: GLASS-FILLED THERMOPLASTIC
UL RATED 94V-0
CONTACTS: COPPER ALLOY
ELECTRICALS:
CONTACT CURRENT RATING: 5 AMPS
DIELECTRIC WITHSTANDING VOLTAGE: AC 1200 R.M.S.
INSULATION RESISTANCE: 1000 mohms MINIMUM AT 500V DC
CONTACT RESISTANCE: 30 mOHMS MAXIMUM
OPERATING TEMPERATURE: -55°C TO +125°C

THESE DRAWINGS AND SPECIFICATIONS ARE THE PROPERTY OF NorComp AND SHALL NOT BE REPRODUCED, COPIED OR USED AS THE BASIS FOR THE MANUFACTURE OF SALE OF APPARATUS WITHOUT WRITTEN PERMISSION.

NorComp

DRAWN: WAYNE ROBBINS		DATE: 9-21-98	
CHECKED:		DATE:	
SCALE: 1:1	SHEET 1 OF 1		REV 4
DWG NO. 112-XXX-113-001			