Distributor of NXP Semiconductors/Freescale Semiconductor, Inc. : Excellent Integrated S
Datasheet of TDA18292HN/C1,157 - IC TV SILICON TUNER 32-HVQFN
Contact us: sales@integrated-circuit.com Website: www.integrated-circuit.com

Excellent Integrated System Limited

Stocking Distributor

Click to view price, real time Inventory, Delivery & Lifecycle Information:

NXP Semiconductors/Freescale Semiconductor, Inc.
TDA18292HN/C1,157

For any questions, you can email us directly:
sales@integrated-circuit.com

Distributor of NXP Semiconductors/Freescale Semiconductor, Inc. : Excellent Integrated S
Datasheet of TDA18292HN/C1,157 - IC TV SILICON TUNER 32-HVQFN
l-circuit.com Website: www.integrated-circuit.com

NXP silicon tuner
TDA18292HN

Ultra low power Terrestrial and Satellite multi-band Silicon Tuner for portable TV

Optimized for digital TV reception in low power appliances, NXP's new generation terrestrial and satellite silicon tuner TDA18292HN covers DVB-T, DVB-H, DVB-SH, T-DMB and ISDB-T standards. This highly integrated, 5-in-1 solution significantly reduces application costs, and improves TV reception quality in portable applications. Low power dissipation combined with high immunity to other cellular and connectivity standards make it ideal for a wide variety of portable and handheld applications including notebooks, USB sticks, multimedia / DVD players, mobile phones and navigation devices.

Key benefits

- Improved TV reception and image quality
- Increased operating time and lower battery costs due to low power dissipation
- Reduced board size and overall cost due to lower external passive component count
- Ready for multi-tuner configuration (antenna diversity)
- Standard Zero-IF output interface to channel decoder
- Easy to integrate in System-in-Package and MCM solutions

Key features

- DVB-T, DVB-H, DVB-SH, T-DMB and ISDB-T applications
- MBRAI 2.0 and Nordig V1.0.3 compliant
- Wide dynamic AGC: 70 dB range, 0.5 dB control step
- Multiple reference clock frequency compliancy:
  - 16 MHz for quartz (XO)
  - 19.2, 26, 38.4 and 52 MHz for external reference (e.g. TCXO)
- 2.7 V analog / 1.8 V digital supply
- Small form factor 32-pin HVQFN package, only 5 mm x 5 mm

Key applications

- Mobile phones
- Portable LCD TVs and multimedia / DVD players
- PDAs, notebook PCs and USB sticks
- Portable navigation devices (GPS)
- Handheld games

Benefiting from a direct down-conversion zero-IF radio architecture, the TDA18292 makes a very compact, high performance and low power solution. Excellent sensitivity, due to a noise figure of less than 3dB, is complemented by high immunity to cellular and connectivity standards – crucial in applications such as mobile phones. Power consumption is extremely low: only 20 mW in DVB-H, 80 mW in T-DMB and 170 mW in DVB-T.

founded by Philips

Distributor of NXP Semiconductors/Freescale Semiconductor, Inc. : Excellent Integrated S
Datasheet of TDA18292HN/C1,157 - IC TV SILICON TUNER 32-HVQFN
Contact us: sales@integrated-circuit.com Website: www.integrated-circuit.com

A clear advantage

The tuner includes all the functions required to perform digital TV reception, from RF input to baseband I/Q outputs. It includes a balanced low-noise amplifier, complex mixer, channel filters with built-in self calibration and a complete RF PLL with fully integrated VCO, so no balun is required.

Programming is made easy through its I2C serial interface, and it is possible to control two different tuners with a single line thanks to an address select pin. A dedicated turn-on/-off pin allows power reduction for time sliced applications and gain is programmable in 0.5 dB steps using two up / down pins.

Making product integration easier, the PLL can operate across a range of clock frequencies, and either a simple crystal oscillation or a TCXO can be used for clock frequency generation.

Evaluation kit

Our TDA18292 evaluation kit makes it simple for hardware engineers to modify programmable settings and customize operation. It includes tuner daughterboard, channel decoder board for system testing, quick start guide, product specification, application note and PC-based control software. The tuner daughterboard can be easily connected to other zero-IF channel decoders.

Multi-standard and multi-band capability

NXP's TDA18292 is compliant with the following standards:

- Terrestrial Digital Video Broadcast (DVB-T)
- Handheld DVB (DVB-H)
- Satellite services to Handheld (DVB-SH)
- Terrestrial Digital Multi-media Broadcasting (T-DMB)
- Integrated Services Digital Broadcasting – Terrestrial (ISDB-T)

It operates in the following bands and supports 1.5 / 5 / 6 / 7 / 8 MHz channel bandwidths:

- VHF III (174-240MHz)
- UHF (470-862MHz)
- L1 (1452-1492MHz)
- L2 (1670-1675MHz)
- S (2170-2200MHz)

TDA18292 block diagram

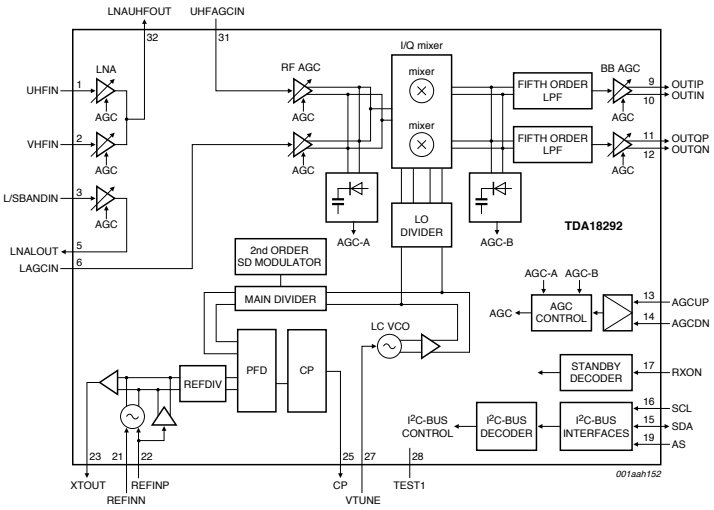

System level block diagram

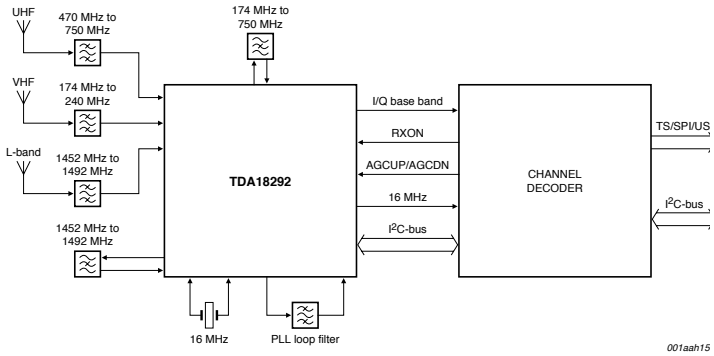

founded by PHILIPS

© 2008 NXP B.V.
All rights reserved. Reproduction in whole or in part is prohibited without the prior written consent of the copyright owner. The information presented in this document does not form part of any quotation or contract, is believed to be accurate and reliable and may be changed without notice. No liability will be accepted by the publisher for any consequence of its use. Publication thereof does not convey nor imply any license under patent- or other industrial or intellectual property rights.

Date of release: January 2008
Document order number: 9397 750 16256
Printed in the Netherlands