Excellent Integrated System Limited

Stocking Distributor

Click to view price, real time Inventory, Delivery & Lifecycle Information:

Serpac Electronic Enclosures
WM022I,AL

For any questions, you can email us directly:
sales@integrated-circuit.com

SERPAC Electronic Enclosures WM022-I (exploded isometric)

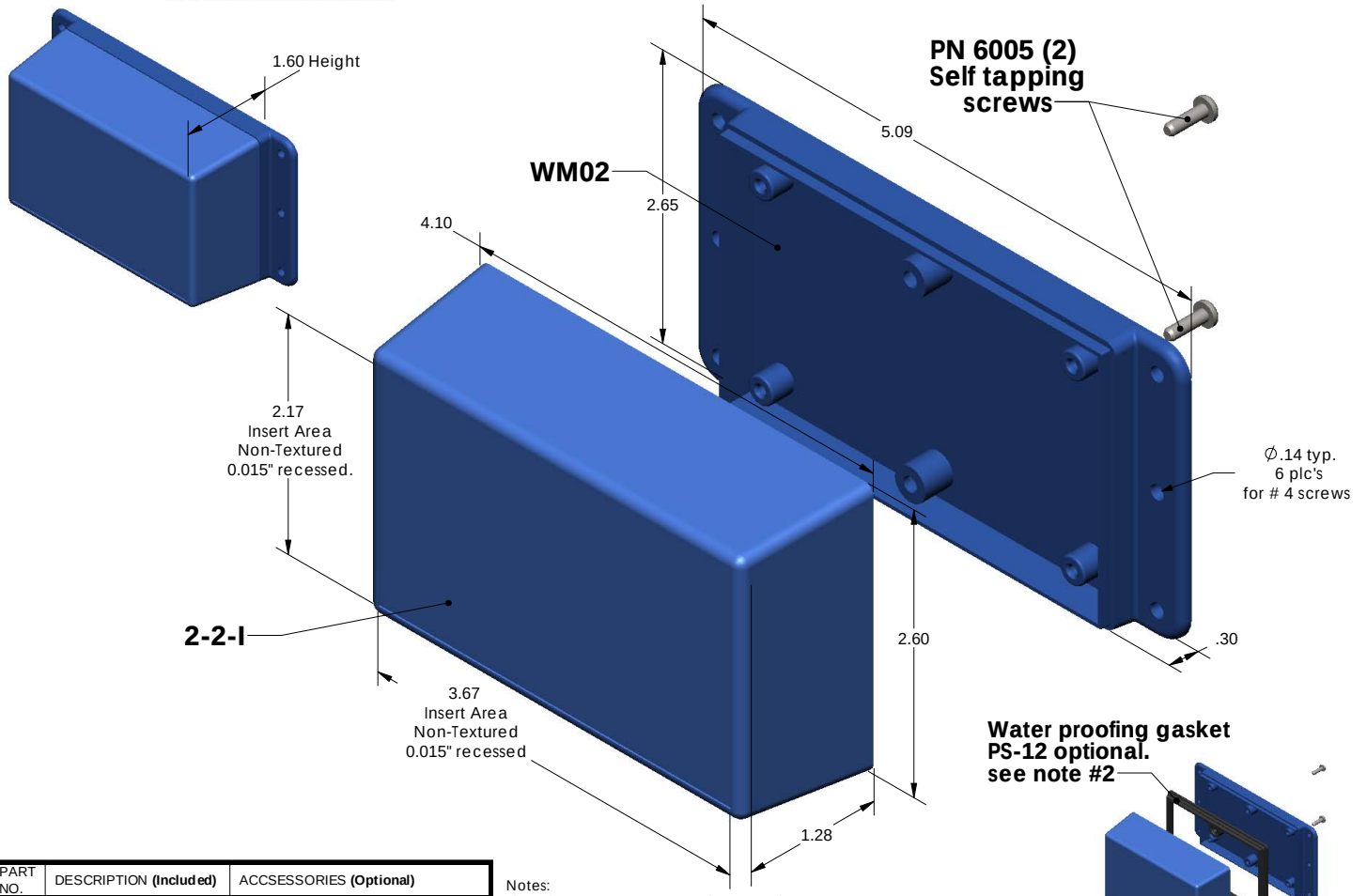

Water proofing gasket
PS-12 optional.
see note #2

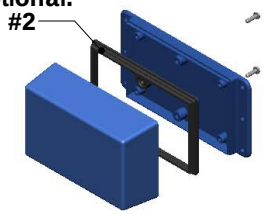

PART NO.	DESCRIPTION **(Included)**	ACCSESSORIES **(Optional)**	
2-2-I	TOP	PART NO.	DESCRIPTION
WM02	BOTTOM	PS-12	Perimeter Seal
6005	#4 self tapping screw (2)		

Notes:
1) Enclosure meets or exceeds IP40 and NEMA 1
2) When used with PS-12 the enclosure meets or exceeds IP 67 and NEMA 4X, 12 and 13 MIL-STD-810G 506.5
3) Circuit Board drawings can be download at:
http://www.serpac.com/Products/Accessories/CircuitBoard/drawings/CB_WMX22.pdf
4) All components are RoHS Compliant.

ALL DIMENSIONS ARE ± .010" 5/20/09 (1 of 2)
619 Commercial Ave. Covina, CA 91723
Ph. (626) 331-0517 Fx. (626) 331-8584 serpac.com

SERPAC Electronic Enclosures WM022-I (user print)

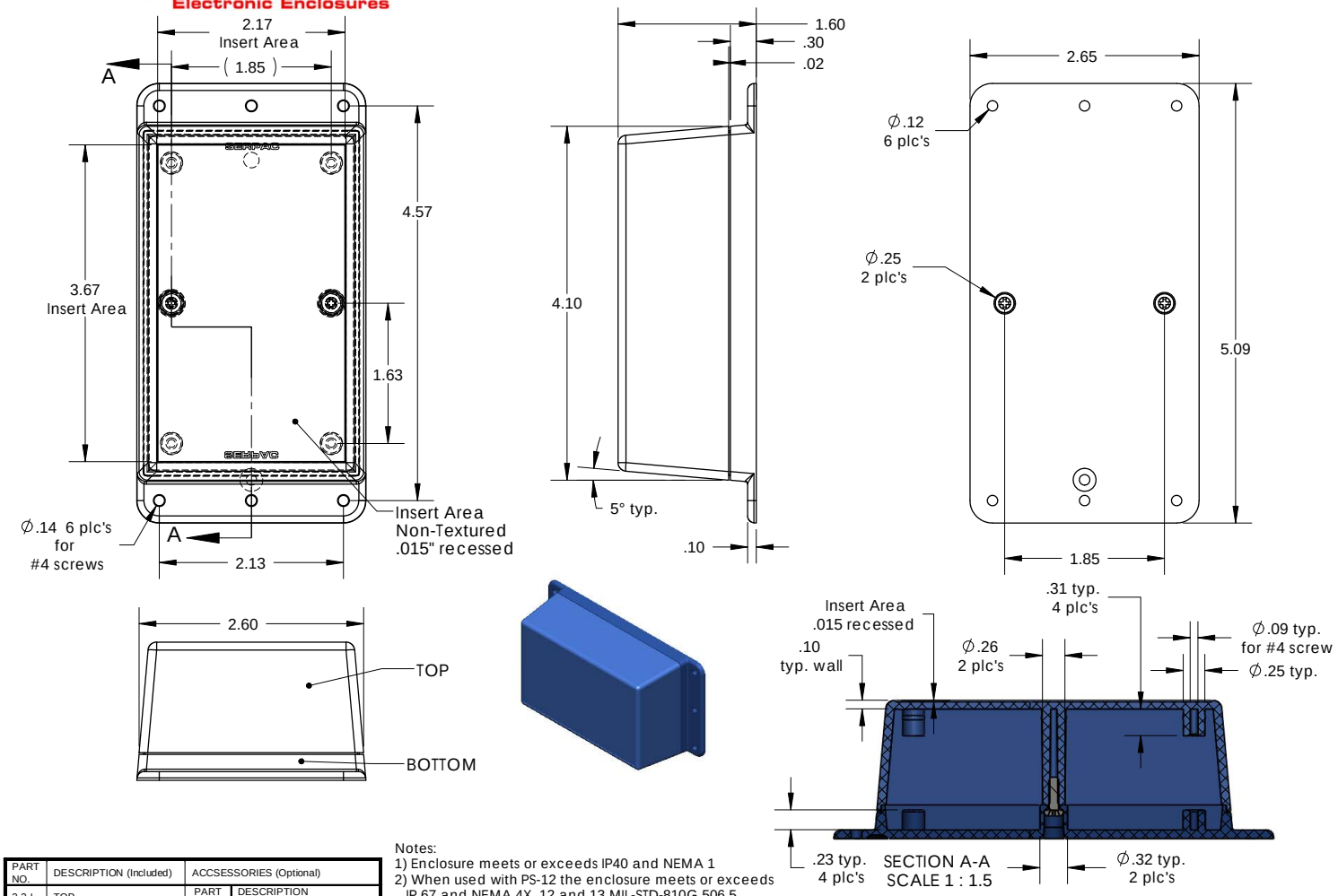

PART NO.	DESCRIPTION (Included)	ACCSESSORIES (Optional)	
2-2-I	TOP	PART NO.	DESCRIPTION
WM02	BOTTOM	PS-12	Perimeter Seal
6005	#4 self tapping screw (2)		

Notes:
1) Enclosure meets or exceeds IP40 and NEMA 1
2) When used with PS-12 the enclosure meets or exceeds IP 67 and NEMA 4X, 12 and 13 MIL-STD-810G 506.5
3) Circuit Board drawings can be download at:
http://www.serpac.com/Products/Accessories/CircuitBoard/drawings/CB_WMX22.pdf
4) All components are RoHS Compliant.

ALL DIMENSIONS ARE ± .010" 5/26/09 (2 of 2)

619 Commercial Ave. Covina, CA 91723
Ph. (626) 331-0517 Fx. (626) 331-8584 www.serpac.com