Excellent Integrated System Limited

Stocking Distributor

Click to view price, real time Inventory, Delivery & Lifecycle Information:

STMicroelectronics
ST1L05DPUR

For any questions, you can email us directly:
sales@integrated-circuit.com

Distributor of STMicroelectronics: Excellent Integrated System Limited
Datasheet of ST1L05DPUR - IC REG LDO ADJ 1.3A 8DFN
Contact us: sales@integrated-circuit.com Website: www.integrated-circuit.com

ST1L05

Very low quiescent current BiCMOS voltage regulator

Datasheet - production data

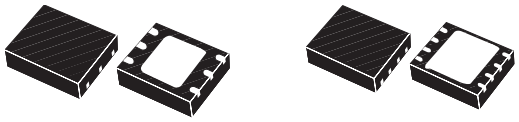

DFN6 (3x3 mm) **DFN8 (4x4 mm)**

Features

- Fixed output voltage: 1.8 V, 2.5 V, 3.3 V and ADJ
- Output voltage tolerance: ± 2% at 25 °C
- Output current capability: 1.3 A
- Very low quiescent current: max. 650 µA
- Typ. dropout 0.3 V (@ I_O = 1.3 A)
- Enable function for B, C and D versions
- Power Good function for B and D versions
- Stable with low ESR ceramic capacitors
- Thermal shutdown protection with hysteresis
- Overcurrent protection
- Operating junction temperature range: from 0 to 125 °C

Description

The ST1L05 is a low drop linear voltage regulator, which supplies up to 1.3 A output current.

The output voltage is fixed at 1.8 V, 2.5 V, 3.3 V and it is adjustable. It is available in three different versions with different pinouts.

Thanks to BiCMOS technology, the quiescent current is controlled and maintained below 650 µA over the entire allowed junction temperature range. The ST1L05 is stable with low ESR output ceramic capacitors.

Internal protection circuitry includes thermal protection with hysteresis and overcurrent limiting.

The ST1L05 is suitable for data storage applications such as HDDs, where it can supply 3.3 V required by read channel and memory chips.

The regulator is available in the small and thin DFN6 (3x3 mm) and DFN8 (4x4 mm) packages.

Table 1. Device summary

Order codes	Package	Output voltage
ST1L05PU25R	DFN6 (3x3 mm)	2.5 V
ST1L05APU33R	DFN6 (3x3 mm)	3.3 V
ST1L05BPUR	DFN6 (3x3 mm)	ADJ
ST1L05CPU33R	DFN6 (3x3 mm)	3.3 V
ST1L05DPUR	DFN8 (4x4 mm)	ADJ

This is information on a product in full production. www.st.com

Distributor of STMicroelectronics: Excellent Integrated System Limited
Datasheet of ST1L05DPUR - IC REG LDO ADJ 1.3A 8DFN
Contact us: sales@integrated-circuit.com Website: www.integrated-circuit.com

Contents

1 Schematic diagram 5

2 Pin configuration 7

3 Maximum ratings 8

4 Electrical characteristics 9

5 Typical characteristics 14

6 Application information 17

6.1 Power dissipation 19

6.2 Enable function (ST1L05B, ST1L05C and ST1L05D only) 20

6.3 Power Good function (ST1L05B and ST1L05D only) 20

7 Package mechanical data 21

8 Packaging mechanical data 25

9 Revision history 29

Distributor of STMicroelectronics: Excellent Integrated System Limited
Datasheet of ST1L05DPUR - IC REG LDO ADJ 1.3A 8DFN
Contact us: sales@integrated-circuit.com Website: www.integrated-circuit.com

List of tables

Table 1. Device summary . . . 1
Table 2. Pin description . . . 7
Table 3. Absolute maximum ratings . . . 8
Table 4. Thermal data . . . 8
Table 5. ESD data . . . 8
Table 6. ST1L05PU25R electrical characteristics . . . 9
Table 7. ST1L05APU33R electrical characteristics . . . 10
Table 8. ST1L05CPU33R electrical characteristics . . . 11
Table 9. ST1L05BPUR and ST1L05DPUR electrical characteristics . . . 12
Table 10. DFN6 (3x3 mm) mechanical data . . . 22
Table 11. DFN8 (4x4 mm) mechanical data . . . 24
Table 12. DFN6 (3x3 mm) tape and reel mechanical data . . . 26
Table 13. DFN8 (4x4 mm) reel mechanical data . . . 28
Table 14. Document revision history . . . 29

Distributor of STMicroelectronics: Excellent Integrated System Limited
Datasheet of ST1L05DPUR - IC REG LDO ADJ 1.3A 8DFN
Contact us: sales@integrated-circuit.com Website: www.integrated-circuit.com

List of figures

Figure 1. ST1L05 schematic diagram . . . 5
Figure 2. ST1L05A schematic diagram . . . 5
Figure 3. ST1L05B and ST1L05D schematic diagram . . . 6
Figure 4. ST1L05C schematic diagram . . . 6
Figure 5. Pin connections (top view) . . . 7
Figure 6. Output voltage vs temperature V_O = 1.22 V, I_O = 10 mA . . . 14
Figure 7. Output voltage vs temperature V_O = 1.22 V, I_O = 1.3 A . . . 14
Figure 8. Output voltage vs temperature V_O = 2.5 V, I_O = 10 mA . . . 14
Figure 9. Output voltage vs temperature V_O = 2.5 V, I_O = 1.3 A . . . 14
Figure 10. Line regulation vs temperature . . . 14
Figure 11. Load regulation vs temperature . . . 14
Figure 12. Dropout voltage vs temperature . . . 15
Figure 13. ESR required for stability with ceramic capacitors . . . 15
Figure 14. Quiescent current vs temperature . . . 15
Figure 15. Quiescent current vs output current . . . 15
Figure 16. Enable voltage vs temperature V_I = 3 V . . . 15
Figure 17. Enable voltage vs temperature V_I = 5.25 V . . . 15
Figure 18. Supply voltage rejection vs temperature . . . 16
Figure 19. Supply voltage rejection vs frequency . . . 16
Figure 20. Load transient . . . 16
Figure 21. Short-circuit removal transient . . . 16
Figure 22. Line transient . . . 16
Figure 23. Enable transient . . . 16
Figure 24. ST1L05 application schematic . . . 17
Figure 25. ST1L05A application schematic . . . 18
Figure 26. ST1L05B and ST1L05D application schematic . . . 18
Figure 27. ST1L05C application schematic . . . 19
Figure 28. DFN6 (3x3 mm) drawings . . . 21
Figure 29. DFN6 (3x3 mm) recommended footprint . . . 22
Figure 30. DFN8 (4x4 mm) drawings . . . 23
Figure 31. DFN8 (4x4 mm) recommended footprint . . . 24
Figure 32. DFN6 (3x3 mm) tape . . . 25
Figure 33. DFN6 (3x3 mm) reel . . . 26
Figure 34. DFN8 (4x4 mm) carrier tape . . . 27
Figure 35. DFN8 (4x4 mm) reel . . . 28

Distributor of STMicroelectronics: Excellent Integrated System Limited
Datasheet of ST1L05DPUR - IC REG LDO ADJ 1.3A 8DFN
Contact us: sales@integrated-circuit.com Website: www.integrated-circuit.com

1 Schematic diagram

Figure 1. ST1L05 schematic diagram

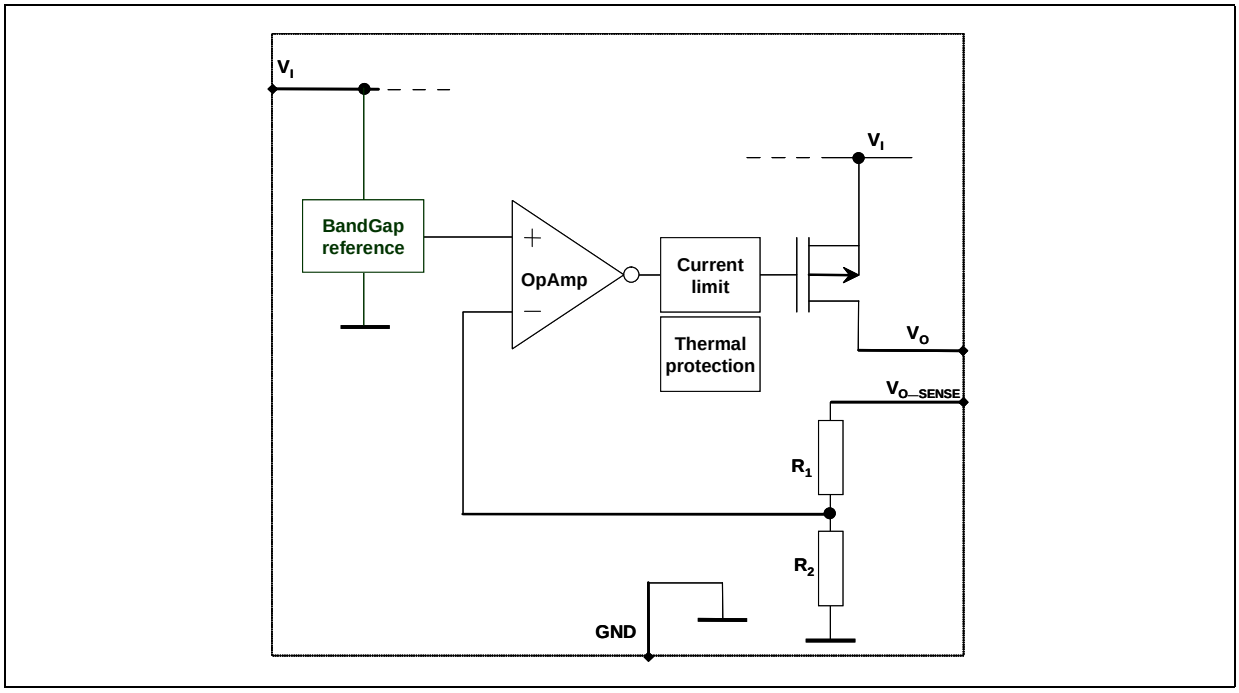

Figure 2. ST1L05A schematic diagram

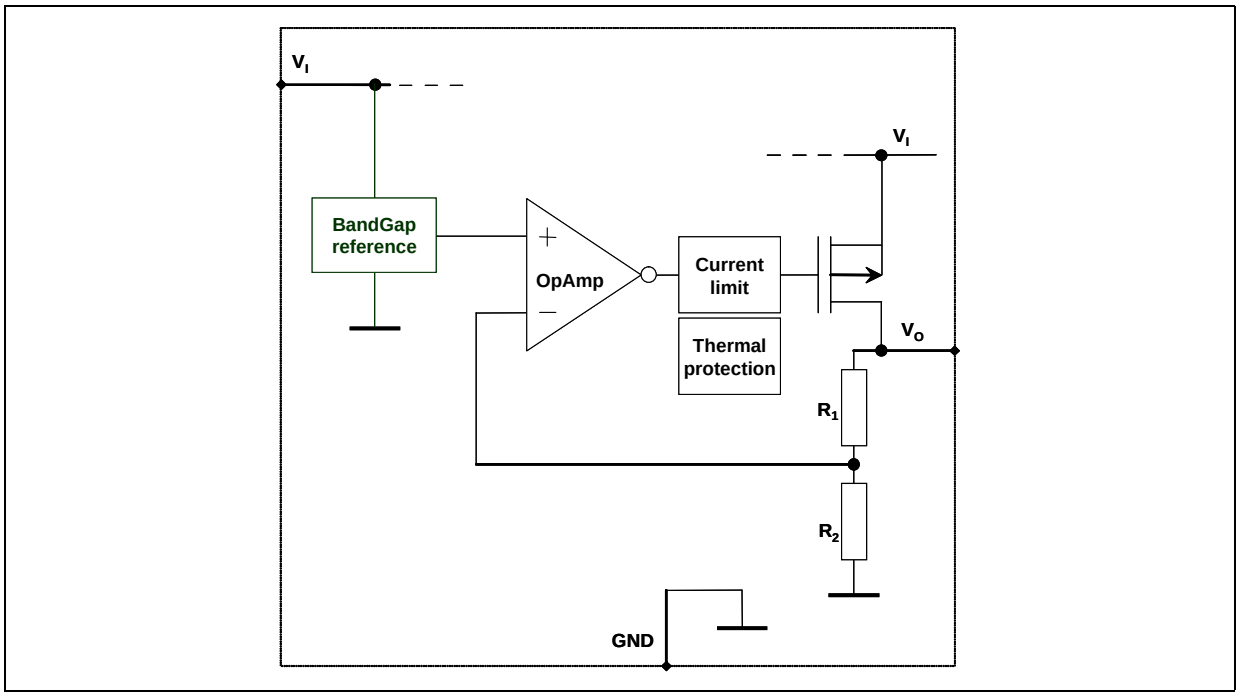

Distributor of STMicroelectronics: Excellent Integrated System Limited
Datasheet of ST1L05DPUR - IC REG LDO ADJ 1.3A 8DFN
Contact us: sales@integrated-circuit.com Website: www.integrated-circuit.com

Figure 3. ST1L05B and ST1L05D schematic diagram

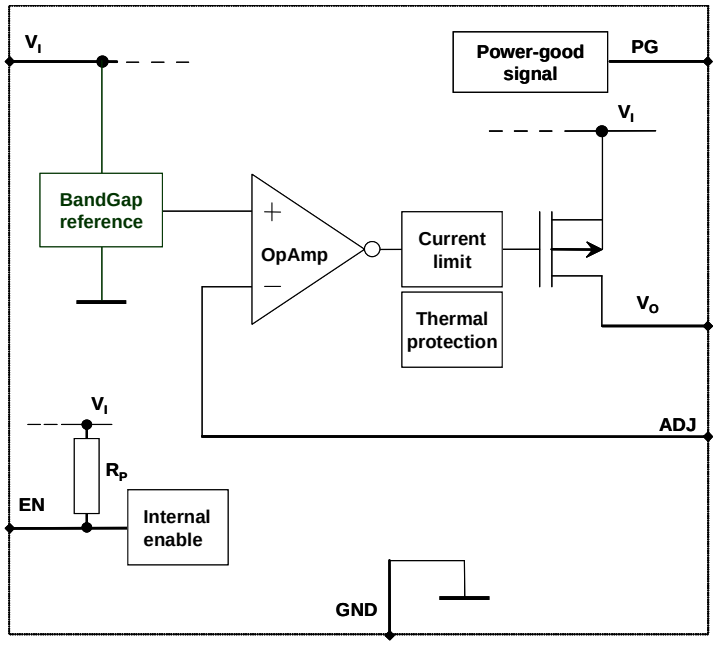

Figure 4. ST1L05C schematic diagram

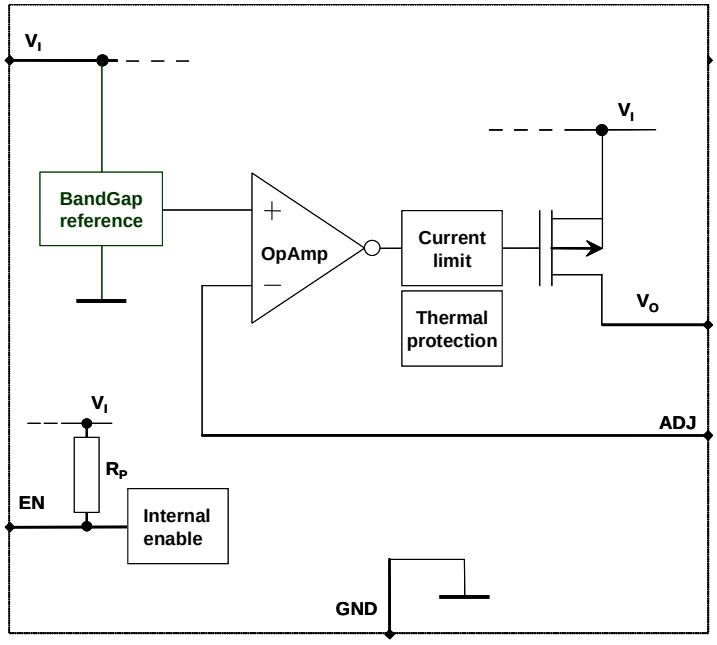

Distributor of STMicroelectronics: Excellent Integrated System Limited
Datasheet of ST1L05DPUR - IC REG LDO ADJ 1.3A 8DFN
Contact us: sales@integrated-circuit.com Website: www.integrated-circuit.com

2 Pin configuration

Figure 5. Pin connections (top view)

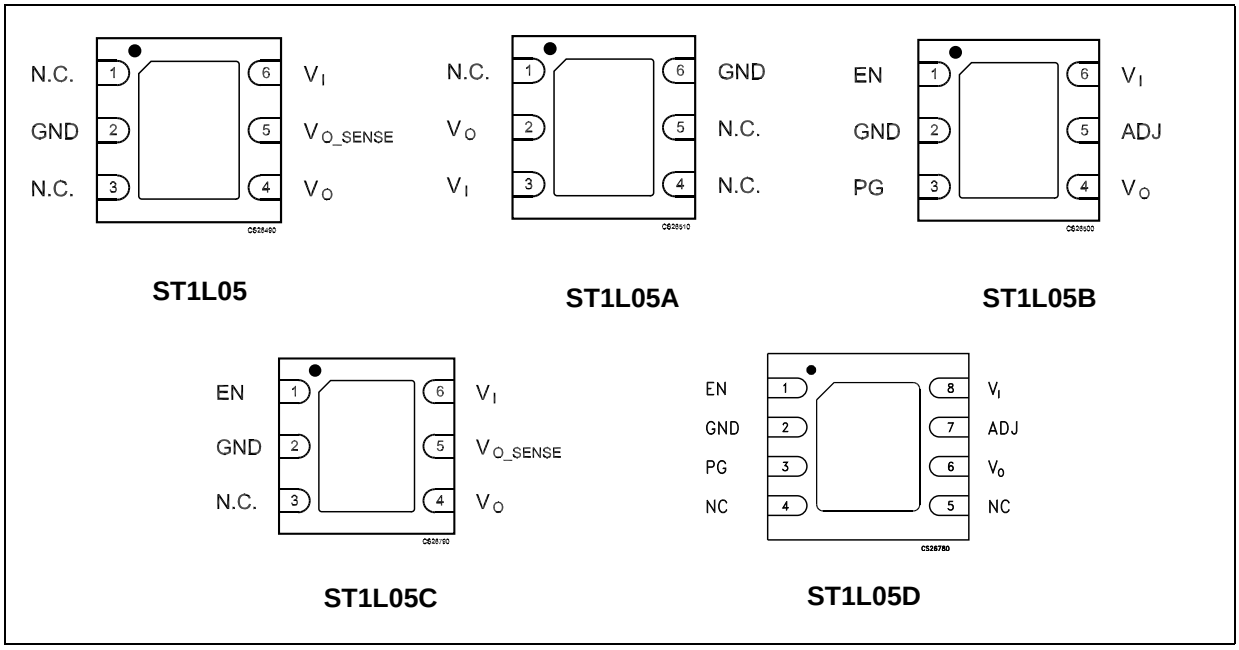

Table 2. Pin description

Symbol	Pin					Function
	ST1L05	ST1L05A	ST1L05B	ST1L05C	ST1L05D	
V_I	6	3	6	6	8	Supply voltage input pin. Bypass with a 4.7 µF capacitor to GND
V_O	4	2	4	4	6	Output voltage pin. Bypass with a 4.7 µF capacitor to GND
GND	2	6	2	2	2	Ground pin
ADJ	-	-	5	-	7	Adjust pin
V_{O_SENSE}	5	-	-	5	-	V_O sense
PG	-	-	3	-	3	Power Good pin
EN	-	-	1	1	1	Enable pin. Internal pull-up to V_I
N.C.	1-3	1-4-5	-	3	4-5	Not connected
GND	Exposed					Exposed pad has to be connected to GND

Distributor of STMicroelectronics: Excellent Integrated System Limited
Datasheet of ST1L05DPUR - IC REG LDO ADJ 1.3A 8DFN
Contact us: sales@integrated-circuit.com Website: www.integrated-circuit.com

3 Maximum ratings

Table 3. Absolute maximum ratings

Symbol	Parameter	Value	Unit
V_I	DC supply voltage	-0.3 to 7	V
V_O	DC output voltage	-0.3 to 7	V
PG	Power Good	-0.3 to 7	V
EN	Enable pin	-0.3 to 7	V
ADJ/V_{OUT_SENSE}	Adjust pin or V_O sense	4	V
P_D	Power dissipation	Internally limited	W
I_O	Output current	Internally limited	A
T_{OP}	Operating junction temperature range	0 to 150	°C
T_{STG}	Storage temperature range(1)	-65 to 150	°C
T_{LEAD}	Lead temperature (soldering) 10 seconds	260	°C

1. Storage temperature > 125 °C is acceptable only if the regulator is soldered to a PCBA.

Note: Absolute maximum ratings are those values beyond which damage to the device may occur. Functional operation under these conditions is not implied.

Table 4. Thermal data

Symbol	Parameter	DFN6	DFN8	Unit
R_{thJC}	Thermal resistance junction-case	10	4	°C/W
R_{thJA}	Thermal resistance junction-ambient	55	40	°C/W

Table 5. ESD data

Symbol	Parameter	Value	Unit
HBM	Human body model	2	kV
MM	Machine model	150	V

Distributor of STMicroelectronics: Excellent Integrated System Limited
Datasheet of ST1L05DPUR - IC REG LDO ADJ 1.3A 8DFN
Contact us: sales@integrated-circuit.com Website: www.integrated-circuit.com

4 Electrical characteristics

Refer to the typical application schematic, V_I = 3.3 V to 4.5 V, I_O = 5 mA to 1.3 A, $C_I = C_O$ = 4.7 µF, T_J = 0 to 125 °C, unless otherwise specified. Intended typical value is T_J = 25 °C unless otherwise specified.

Table 6. ST1L05PU25R electrical characteristics

Symbol	Parameter	Test conditions	Min.	Typ.	Max.	Unit
V_O	Output voltage	V_I = 3.3 V to 5.25 V, T = 25 °C	2.45	2.5	2.55	V
V_O	Output voltage	V_I = 3.3 V to 5.25 V	2.4375	2.5	2.5625	V
ΔV_O	Line regulation	V_I = 4.75 V to 5.25 V			15	mV
ΔV_O	Load regulation	V_I = 4.75 V, I_O = 10 mA to 1.3 A		15	30	mV
I_S	Output current limit	V_I = 5.5 V	1.3			A
I_{OMIN}	Minimum output current for regulation				0	mA
V_d	Dropout voltage	I_O = 0.8 A		0.2	0.4	V
		I_O = 1 A		0.25	0.45	V
		I_O = 1.3 A		0.3	0.5	V
I_Q	Quiescent current	V_I = 5 V, I_O = 2 mA to 1.3 A, T = 25 °C		350	500	µA
		V_I = 5.5 V, I_O = 2 mA to 1.3 A		350	650	
SVR	Supply voltage rejection(1)	$V_I = 5 \pm 0.5$ V, I_O = 5 mA, f = 120 Hz	50	68		dB
eN	RMS output noise(1)	B = 10 Hz to 10 kHz, V_I = 5 V, I_O = 5 mA		0.003		$\%V_O$
$\Delta V_O/\Delta I_O$	Load transient (rising)(1)(2)	V_I = 5 V, any 200 mA step from 100 mA to 1.3 A, $t_R \geq 1$ µs			5	$\%V_O$
$\Delta V_O/\Delta I_O$	Load transient (falling)(1)(2)	V_I = 5 V, I_O = 1.3 A to 10 mA, $t_F \geq 1$ µs			2.75	V
$\Delta V_O/\Delta V_I$	Start-up transient(1)(2)	V_I = 0 V to 5 V, I_O = 10 mA to 1.3 A, $t_R \geq 1$ µs			2.75	V
$\Delta V_O/\Delta I_O$	Short-circuit removal response(1)(2)	V_I = 5 V, I_O = short to 10 mA			2.75	V
T_{SH}	Thermal shutdown trip point(1)	V_I = 5 V		165		°C

1. Guaranteed by design. Not tested in production.
2. C_I = 10 µF, C_O = 10 µF, all X7R ceramic capacitors.

Refer to the typical application schematic, V_I = 4.5 V to 5.5 V, I_O = 5 mA to 1.3 A, $C_I = C_O$ = 4.7 µF, T_J = 0 to 125 °C, unless otherwise specified. Intended typical value is T_J = 25 °C unless otherwise specified.

Table 7. ST1L05APU33R electrical characteristics

Symbol	Parameter	Test conditions	Min.	Typ.	Max.	Unit
V_O	Output voltage	V_I = 4.75 V to 5.25 V, T = 25 °C	3.234	3.3	3.366	V
V_O	Output voltage	V_I = 4.75 V to 5.25 V	3.2175	3.3	3.3825	V
ΔV_O	Line regulation	V_I = 4.75 V to 5.25 V			15	mV
ΔV_O	Load regulation	V_I = 4.75 V, I_O = 10 mA to 1.3 A		15	30	mV
I_S	Output current limit	V_I = 5.5 V	1.3			A
I_{OMIN}	Minimum output current for regulation				0	mA
V_d	Dropout voltage	I_O = 0.8 A		0.2	0.4	V
		I_O = 1 A		0.25	0.45	V
		I_O = 1.3 A		0.3	0.5	V
I_Q	Quiescent current	V_I = 5 V, I_O = 2 mA to 1.3 A, T = 25 °C		350	500	µA
		V_I = 5.5 V, I_O = 2 mA to 1.3 A		350	650	
SVR	Supply voltage rejection(1)	V_I = 5 ± 0.5 V, I_O = 5 mA, f = 120 Hz	50	65		dB
eN	RMS output noise(1)	B = 10 Hz to 10 kHz, V_I = 5 V, I_O = 5 mA		0.003		$\%V_O$
$\Delta V_O/\Delta I_O$	Load transient (rising)(1)(2)	V_I = 5 V, any 200 mA step from 100 mA to 1.3 A, $t_R \geq 1$ µs			5	$\%V_O$
$\Delta V_O/\Delta I_O$	Load transient (falling)(1)(2)	V_I = 5 V, I_O = 1.3 A to 10 mA, $t_F \geq 1$ µs			3.6	V
$\Delta V_O/\Delta V_I$	Start-up transient(1)(2)	V_I = 0 V to 5 V, I_O = 10 mA to 1.3 A, $t_R \geq 1$ µs			3.5	V
$\Delta V_O/\Delta I_O$	Short-circuit removal response (1)(2)	V_I = 5 V, I_O = short to 10 mA			3.5	V
T_{SH}	Thermal shutdown trip point(1)	V_I = 5 V		165		°C

1. Guaranteed by design. Not tested in production.
2. C_I = 10µF, C_O = 10µF, all X7R ceramic capacitors.

Distributor of STMicroelectronics: Excellent Integrated System Limited
Datasheet of ST1L05DPUR - IC REG LDO ADJ 1.3A 8DFN
Contact us: sales@integrated-circuit.com Website: www.integrated-circuit.com

Refer to the typical application schematic, V_I = 4.5 V to 5.5 V, V_{EN} = 2 V, I_O = 5 mA to 1.3 A, C_I = C_O = 4.7 µF, T_J = 0 to 125 °C, unless otherwise specified. Intended typical value is T_J = 25 °C unless otherwise specified.

Table 8. ST1L05CPU33R electrical characteristics

Symbol	Parameter	Test conditions	Min.	Typ.	Max.	Unit
V_O	Output voltage	V_I = 4.75 V to 5.25 V, T = 25 °C	3.234	3.3	3.366	V
V_O	Output voltage	V_I = 4.75 V to 5.25 V	3.2175	3.3	3.3825	V
ΔV_O	Line regulation	V_I = 4.75 V to 5.25 V			15	mV
ΔV_O	Load regulation	V_I = 4.75 V, I_O = 10 mA to 1.3 A		15	30	mV
I_S	Output current limit	V_I = 5.5 V	1.3			A
I_{OMIN}	Minimum output current for regulation				0	mA
V_d	Dropout voltage	I_O = 0.8 A		0.2	0.4	V
		I_O = 1 A		0.25	0.45	V
		I_O = 1.3 A		0.3	0.5	V
I_Q	Quiescent current	V_I = 5 V, I_O = 2 mA to 1.3 A, T = 25 °C		350	500	µA
		V_I = 5.5 V, I_O = 2 mA to 1.3 A		350	650	
V_{EN_H}	Enable threshold high	V_I = 4.5 V to 5.25, I_O = 50 mA	2			V
V_{EN_L}	Enable threshold low	V_I = 4.5 V to 5.25, I_O = 50 mA			0.8	
I_{EN}	Enable pin current	V_{EN} = V_I = 5 V			2	µA
SVR	Supply voltage rejection(1)	V_I = 5 ± 0.5 V, I_O = 5 mA, f = 120 Hz	50	65		dB
eN	RMS output noise(1)	B = 10 Hz to 10 kHz, V_I = 5 V, I_O = 5 mA		0.003		%V_O
$\Delta V_O/\Delta I_O$	Load transient (rising) (1)(2)	V_I = 5 V, any 200 mA step from 100 mA to 1.3 A, $t_R \geq 1$ µs			5	%V_O
$\Delta V_O/\Delta I_O$	Load transient (falling)(1)(2)	V_I = 5 V, I_O = 1.3 A to 10 mA, $t_F \geq 1$ µs			3.6	V
$\Delta V_O/\Delta V_I$	Start-up transient (1)(2)	V_I = 0 V to 5 V, I_O = 10 mA to 1.3 A, $t_R \geq 1$ µs			3.5	V
$\Delta V_O/\Delta I_O$	Short-circuit removal response (1)(2)	V_I = 5 V, I_O = short to 10 mA			3.5	V
T_{SH}	Thermal shutdown trip point(1)	V_I = 5 V		165		°C

1. Guaranteed by design. Not tested in production.
2. C_I =10 µF, C_O =10 µF, all X7R ceramic capacitors.

Distributor of STMicroelectronics: Excellent Integrated System Limited
Datasheet of ST1L05DPUR - IC REG LDO ADJ 1.3A 8DFN
Contact us: sales@integrated-circuit.com Website: www.integrated-circuit.com

Refer to the typical application schematic, V_I = 3 V to 5.5 V, V_{EN} = 2 V, I_O = 5 mA to 1.3 A, C_I = C_O = 4.7 µF, T_J = 0 to 125 °C, unless otherwise specified. Intended typical value is T_J = 25 °C unless otherwise specified.

Table 9. ST1L05BPUR and ST1L05DPUR electrical characteristics

Symbol	Parameter	Test conditions	Min.	Typ.	Max.	Unit
V_O	Output voltage	V_I = 3 V to 5.25 V, T = 25 °C	1.195	1.22	1.245	V
V_O	Output voltage	V_I = 3 V to 5.25 V	1.18	1.22	1.256	V
ΔV_O	Line regulation	V_I = 4.75 V to 5.25 V			15	mV
ΔV_O	Load regulation	V_I = 4.75 V, I_O = 10 mA to 1.3 A		15	30	mV
I_{ADJ}	Adjust pin current	V_I = 3 V to 5.25 V		1		nA
I_S	Output current limit	V_I = 5.5 V	1.3			A
I_{OMIN}	Minimum output current for regulation				1	mA
V_d	Dropout voltage (1)	I_O = 0.8 A, V_O = 3.3 V		0.2		V
		I_O = 1 A, V_O = 3.3 V		0.25		V
		I_O = 1.3 A, V_O = 3.3 V		0.3		V
I_Q	Quiescent current	V_I = 5 V, I_O = 2 mA to 1.3 A, T = 25 °C		300	500	µA
		V_I = 5.5 V, I_O = 2 mA to 1.3 A		350	650	
		Device OFF(2)			1	
V_{EN_H}	Enable threshold high	V_I = 3 V to 5.25, I_O = 50 mA	2			V
V_{EN_L}	Enable threshold low	V_I = 3 V to 5.25, I_O= 50 mA			0.8	
I_{EN}	Enable pin current	V_{EN} = V_I = 5 V			2	µA
PG	Power Good output threshold	Rising edge		0.92 V_O		V
		Falling edge		0.8 V_O		
	Power Good output voltage low(3)	I_{SINK} = 6 mA open drain output			0.4	V
SVR	Supply voltage rejection(3)	V_I = 5 ± 0.5 V, I_O = 5 mA, f = 120 Hz	50	72		dB
eN	RMS output noise(3)	B = 10 Hz to 10 kHz, V_I = 5 V, I_O = 5 mA		0.003		%V_O
$\Delta V_O/\Delta I_O$	Load transient (rising)(3)(4)	V_I = 5 V, any 200 mA step from 100 mA to 1.3 A, $t_R \geq 1$ µs			5	%V_O
$\Delta V_O/\Delta I_O$	Load transient (falling)(3)(4)	V_I = 5 V, I_O = 1.3 A to 10 mA, $t_F \geq 1$ µs			1.38	V
$\Delta V_O/\Delta V_I$	Start-up transient(3)(4)	V_I = 0 V to 5 V, I_O = 10 mA to 1 A, $t_R \geq 1$ µs			1.38	V

Distributor of STMicroelectronics: Excellent Integrated System Limited
Datasheet of ST1L05DPUR - IC REG LDO ADJ 1.3A 8DFN
Contact us: sales@integrated-circuit.com Website: www.integrated-circuit.com

Table 9. ST1L05BPUR and ST1L05DPUR electrical characteristics (continued)

Symbol	Parameter	Test conditions	Min.	Typ.	Max.	Unit
$\Delta V_O/\Delta I_O$	Short-circuit removal response(3)(4)	V_I = 5 V, I_O = short to 10 mA			1.38	V
T_{SH}	Thermal shutdown trip point (3)	V_I = 5 V		165		°C

1. See minimum start-up voltage, V_I = 2.9 V.
2. PG pin floating.
3. Guaranteed by design. Not tested in production.
4. C_I = 10 µF, C_O = 10 µF, all X7R ceramic capacitors.

Distributor of STMicroelectronics: Excellent Integrated System Limited
Datasheet of ST1L05DPUR - IC REG LDO ADJ 1.3A 8DFN
Contact us: sales@integrated-circuit.com Website: www.integrated-circuit.com

5 Typical characteristics

Figure 6. Output voltage vs temperature V_O = 1.22 V, I_O = 10 mA

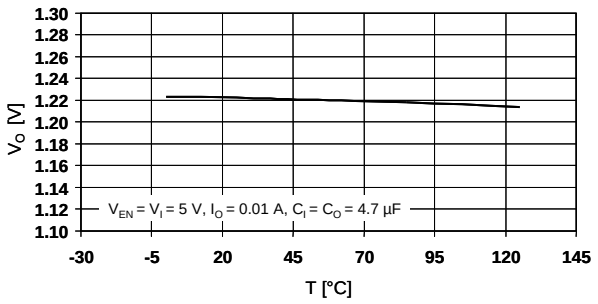

Figure 7. Output voltage vs temperature V_O = 1.22 V, I_O = 1.3 A

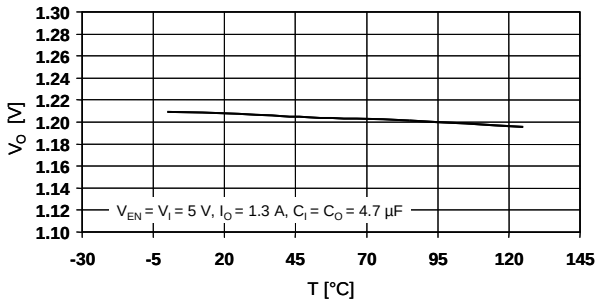

Figure 8. Output voltage vs temperature V_O = 2.5 V, I_O = 10 mA

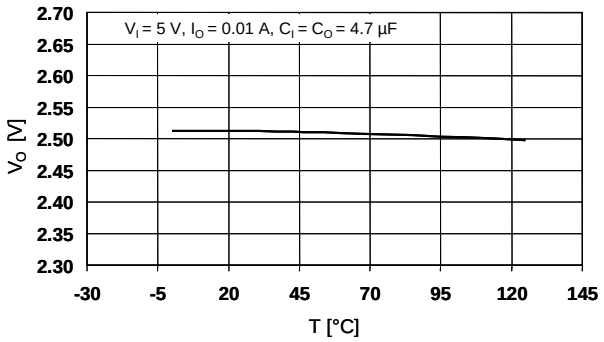

Figure 9. Output voltage vs temperature V_O = 2.5 V, I_O = 1.3 A

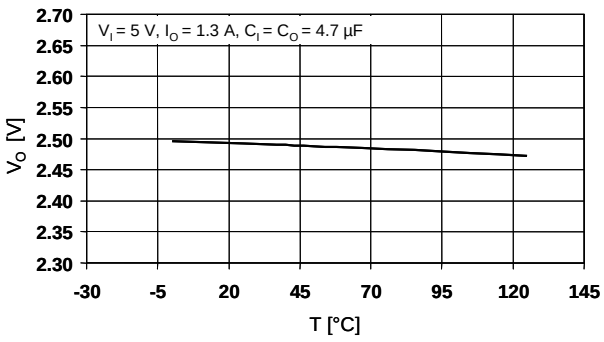

Figure 10. Line regulation vs temperature

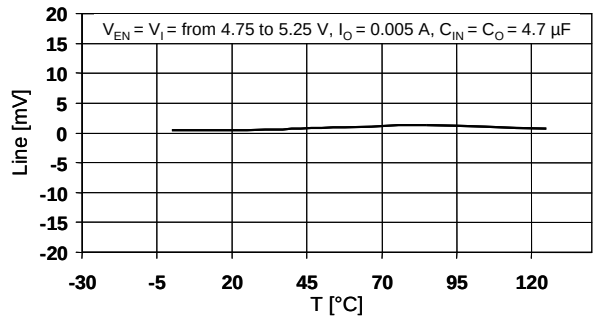

Figure 11. Load regulation vs temperature

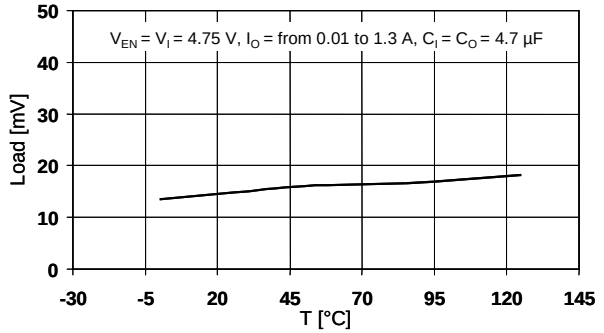

Distributor of STMicroelectronics: Excellent Integrated System Limited
Datasheet of ST1L05DPUR - IC REG LDO ADJ 1.3A 8DFN
Contact us: sales@integrated-circuit.com Website: www.integrated-circuit.com

Figure 12. Dropout voltage vs temperature

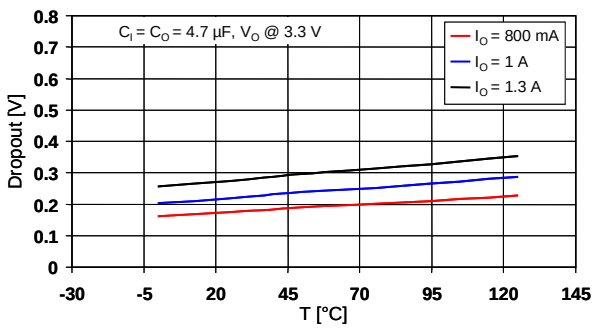

Figure 13. ESR required for stability with ceramic capacitors

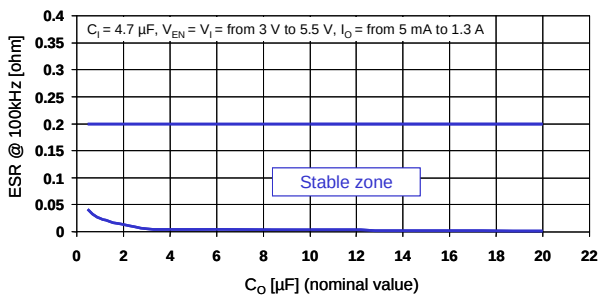

Figure 14. Quiescent current vs temperature

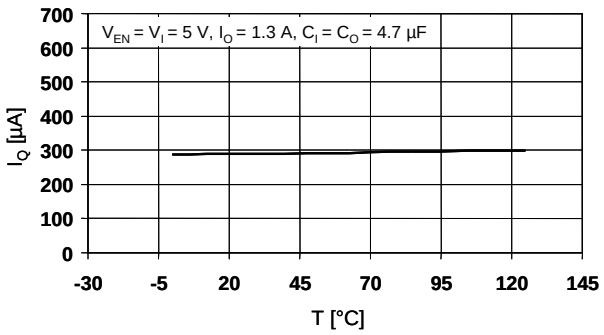

Figure 15. Quiescent current vs output current

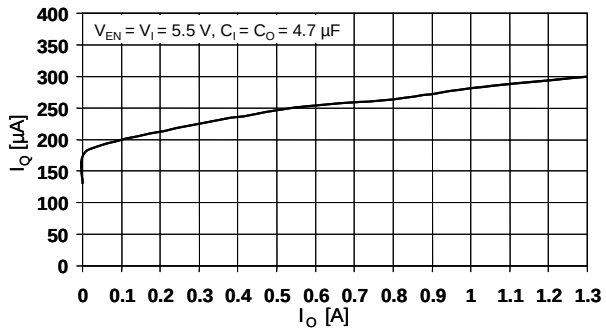

Figure 16. Enable voltage vs temperature V_I = 3 V

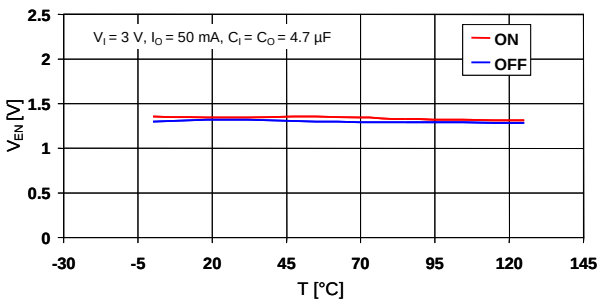

Figure 17. Enable voltage vs temperature V_I = 5.25 V

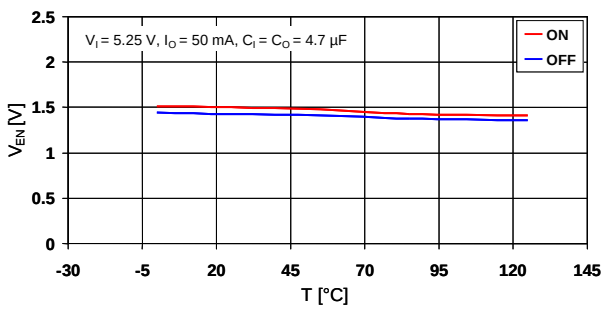

Figure 18. Supply voltage rejection vs temperature

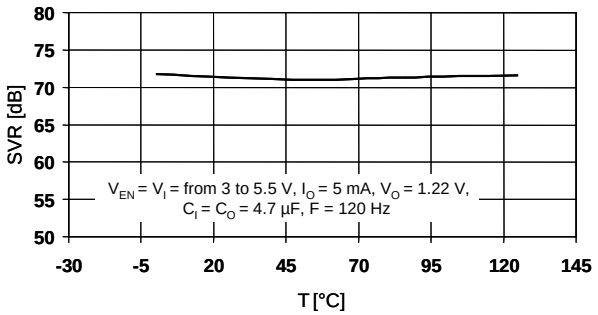

Figure 19. Supply voltage rejection vs frequency

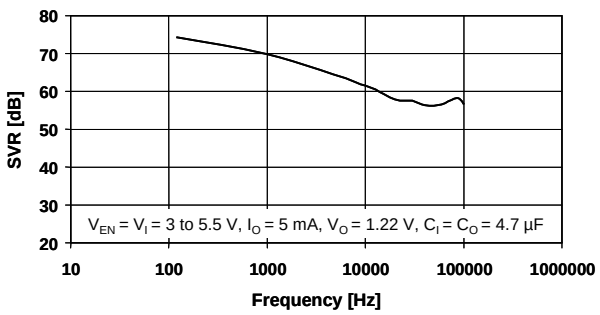

Figure 20. Load transient

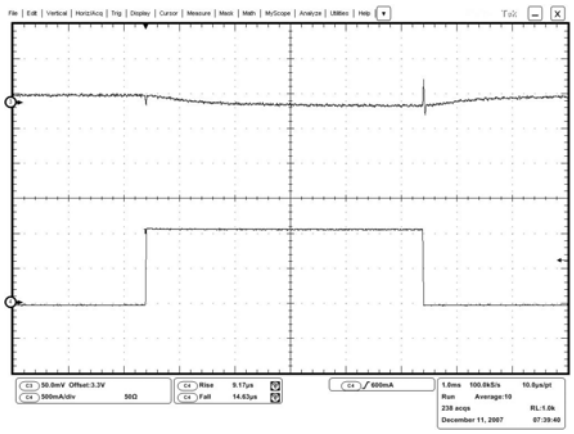

I_O=10 mA to 1.3 A, C_I=C_O=10 µF, V_{EN}=V_I=5 V, V_O@3.3 V

Figure 21. Short-circuit removal transient

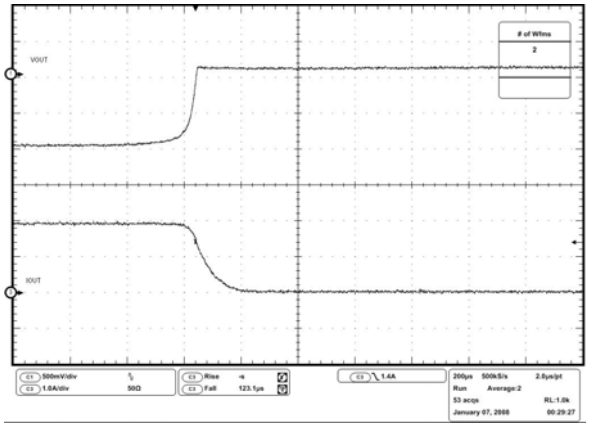

I_O=10 mA to short, C_I=C_O=10 µF, V_{EN}=V_I=5.5 V

Figure 22. Line transient

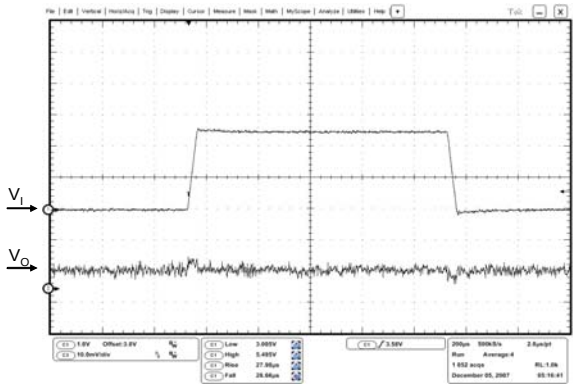

C_I=C_O=4.7 µF, V_I=3 to 5.5V, I_O=5 mA

Figure 23. Enable transient

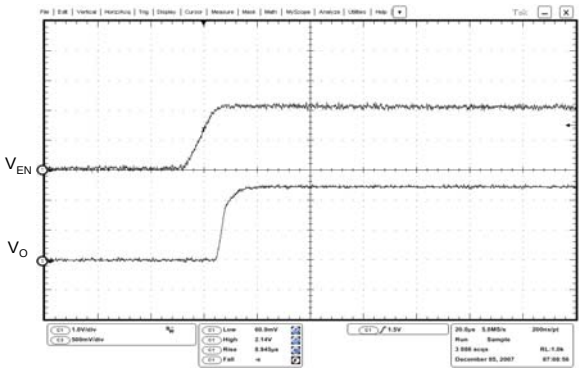

C_O=C_I=4.7 µF, V_{EN}=0 to 2 V, V_I=5.5 V, I_O=5 mA

Distributor of STMicroelectronics: Excellent Integrated System Limited
Datasheet of ST1L05DPUR - IC REG LDO ADJ 1.3A 8DFN
Contact us: sales@integrated-circuit.com Website: www.integrated-circuit.com

6 Application information

The ST1L05 is a low-dropout linear regulator. It provides up to 1.3 A with a low 300 mV dropout. The input voltage range is from 3 V to 5.5 V. The device is available in fixed and adjustable output versions.

The regulator is equipped with internal protection circuitry, such as short-circuit current limiting and thermal protection.

The regulator is designed to be stable with ceramic capacitors on the input and the output. The expected values of the input and output ceramic capacitors are from 1 µF to 22 µF with 4.7 µF typical. The input capacitor has to be connected within 1 cm from V_I terminal. The output capacitor has also to be connected 1 cm far from output pin. There isn't any upper limit to the value of the input capacitor.

Figure 24, *Figure 25*, *Figure 26* and *Figure 27* illustrate the typical application schematics:

Figure 24. ST1L05 application schematic

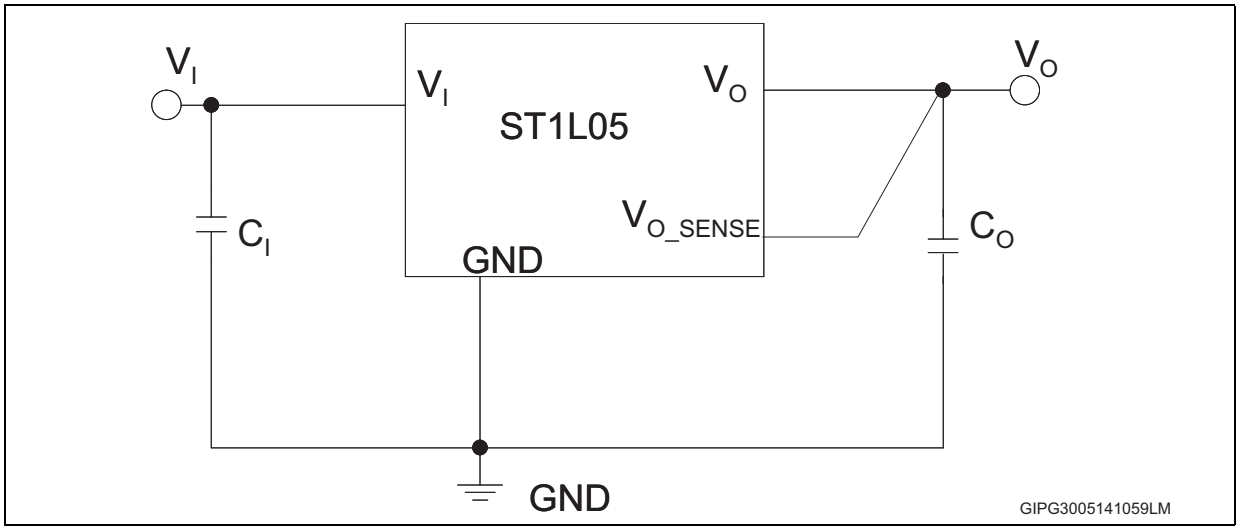

Distributor of STMicroelectronics: Excellent Integrated System Limited
Datasheet of ST1L05DPUR - IC REG LDO ADJ 1.3A 8DFN
Contact us: sales@integrated-circuit.com Website: www.integrated-circuit.com

Figure 25. ST1L05A application schematic

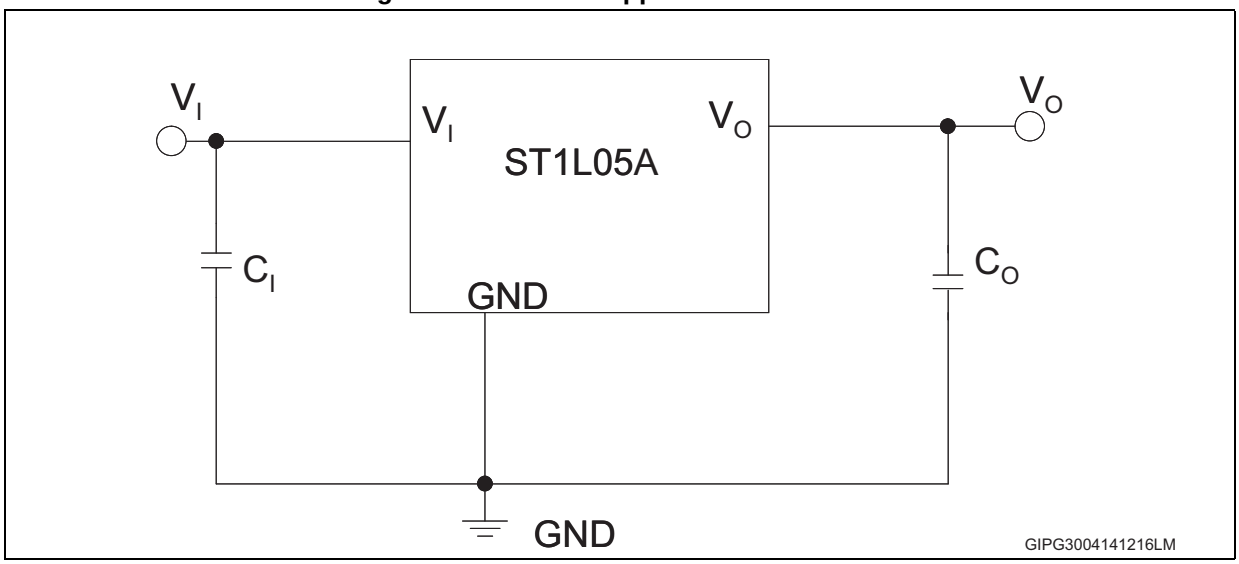

Figure 26. ST1L05B and ST1L05D application schematic

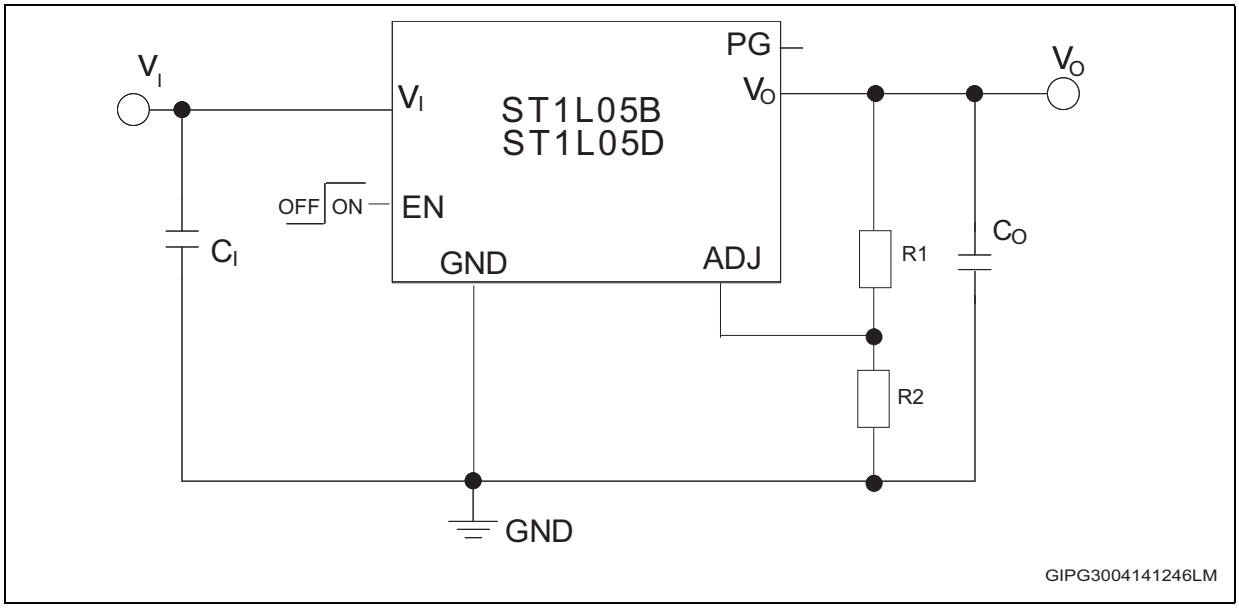

Distributor of STMicroelectronics: Excellent Integrated System Limited
Datasheet of ST1L05DPUR - IC REG LDO ADJ 1.3A 8DFN
Contact us: sales@integrated-circuit.com Website: www.integrated-circuit.com

Figure 27. ST1L05C application schematic

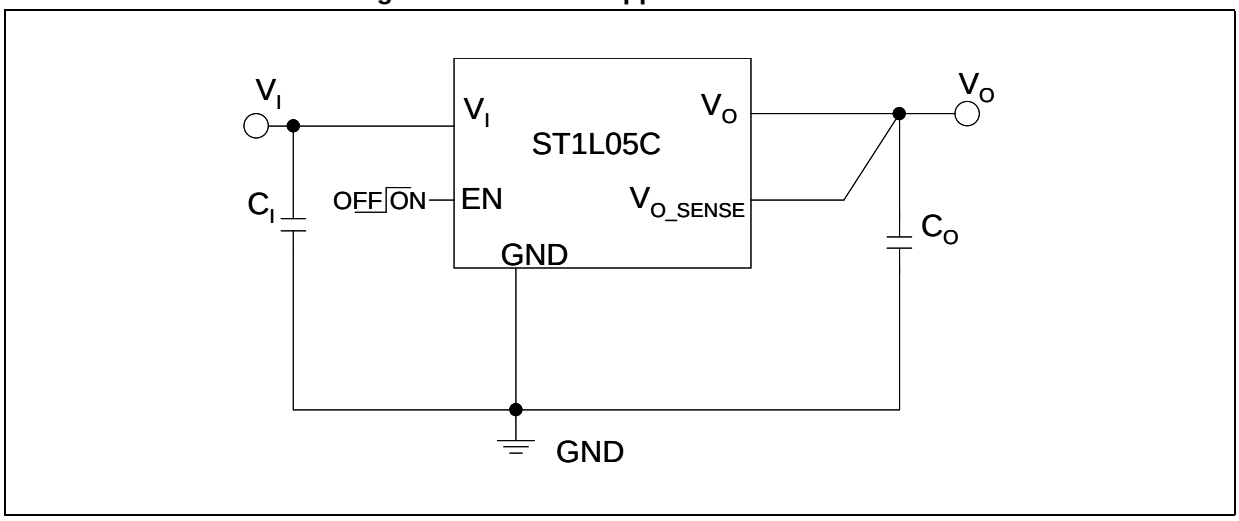

Regarding to the adjustable version, the output voltage can be adjusted from 1.22 V up to the input voltage, minus the voltage drop across PMOS (dropout voltage), by connecting a resistor divider between ADJ pin and the output, thus allowing remote voltage sensing. The resistor divider should be selected according to the following equation:

Equation 1

$V_O = V_{ADJ} (1 + R_1 / R_2)$ with $V_{ADJ} = 1.22$ V (typ.)

Resistors should be used with values in the range from 10 kΩ to 100 kΩ. Lower values can also be suitable, but they increase current consumption.

6.1 Power dissipation

An internal thermal feedback loop disables the output voltage if the die temperature rises to approximately 165 °C. This feature protects the device from excessive temperature and allows the user to push the limits of the power handling capability of a given circuit board without risk of damaging the device.

A good PC board layout should be used to maximize the power dissipation. Thermal path goes from the die to the copper lead frame through the package leads and exposed pad to the PC board copper. The PC board copper works as a heatsink. Footprint copper pads should be as wider as possible to spread and dissipate the heat to the surrounding ambient. Feed-through vias to inner or backside copper layers are also useful to improve the overall thermal performance of the device.

Power dissipation of the device depends on the input voltage, output voltage and output current, and is given by:

Equation 2

$P_D = (V_I - V_O) I_O$

Distributor of STMicroelectronics: Excellent Integrated System Limited
Datasheet of ST1L05DPUR - IC REG LDO ADJ 1.3A 8DFN
Contact us: sales@integrated-circuit.com Website: www.integrated-circuit.com

The junction temperature of the device is:

$T_{J_MAX} = T_A + R_{thJA} \times P_D$

where:

T_{J_MAX} is the maximum junction of the die, 125 °C

T_A is the ambient temperature

R_{thJA} is the thermal resistance junction-to-ambient

6.2 Enable function (ST1L05B, ST1L05C and ST1L05D only)

The ST1L05 features the enable function. When EN voltage is higher than 2 V the device is ON, and if it is lower than 0.8 V the device is OFF. In shutdown mode, consumption is lower than 1 µA. EN pin has an internal pull-up, so it can be left floating if it is not used.

6.3 Power Good function (ST1L05B and ST1L05D only)

Most applications require a flag showing that the output voltage is in the correct range.

Power Good threshold depends on the adjust voltage. When the adjust is higher than $0.92*V_{ADJ}$, Power Good (PG) pin goes to high impedance. If the adjust is below $0.92*V_{ADJ}$ PG pin goes to low impedance. If the device works correctly, Power Good pin is at high impedance.

If the output voltage is fixed using an external or internal resistor divider, Power Good threshold is $0.92*V_O$.

To use Power Good function, an external pull-up resistor is required, and it has to be connected between PG pin and V_I or V_O. PG pin typical current capability is up to 6 mA. A pull-up resistor in the range of 100 kΩ to 1 MΩ is recommended. If Power Good function is not used, PG pin has to remain floating.

Distributor of STMicroelectronics: Excellent Integrated System Limited
Datasheet of ST1L05DPUR - IC REG LDO ADJ 1.3A 8DFN
Contact us: sales@integrated-circuit.com Website: www.integrated-circuit.com

7 Package mechanical data

In order to meet environmental requirements, ST offers these devices in different grades of ECOPACK® packages, depending on their level of environmental compliance. ECOPACK® specifications, grade definitions and product status are available at: *www.st.com*. ECOPACK® is an ST trademark.

Figure 28. DFN6 (3x3 mm) drawings

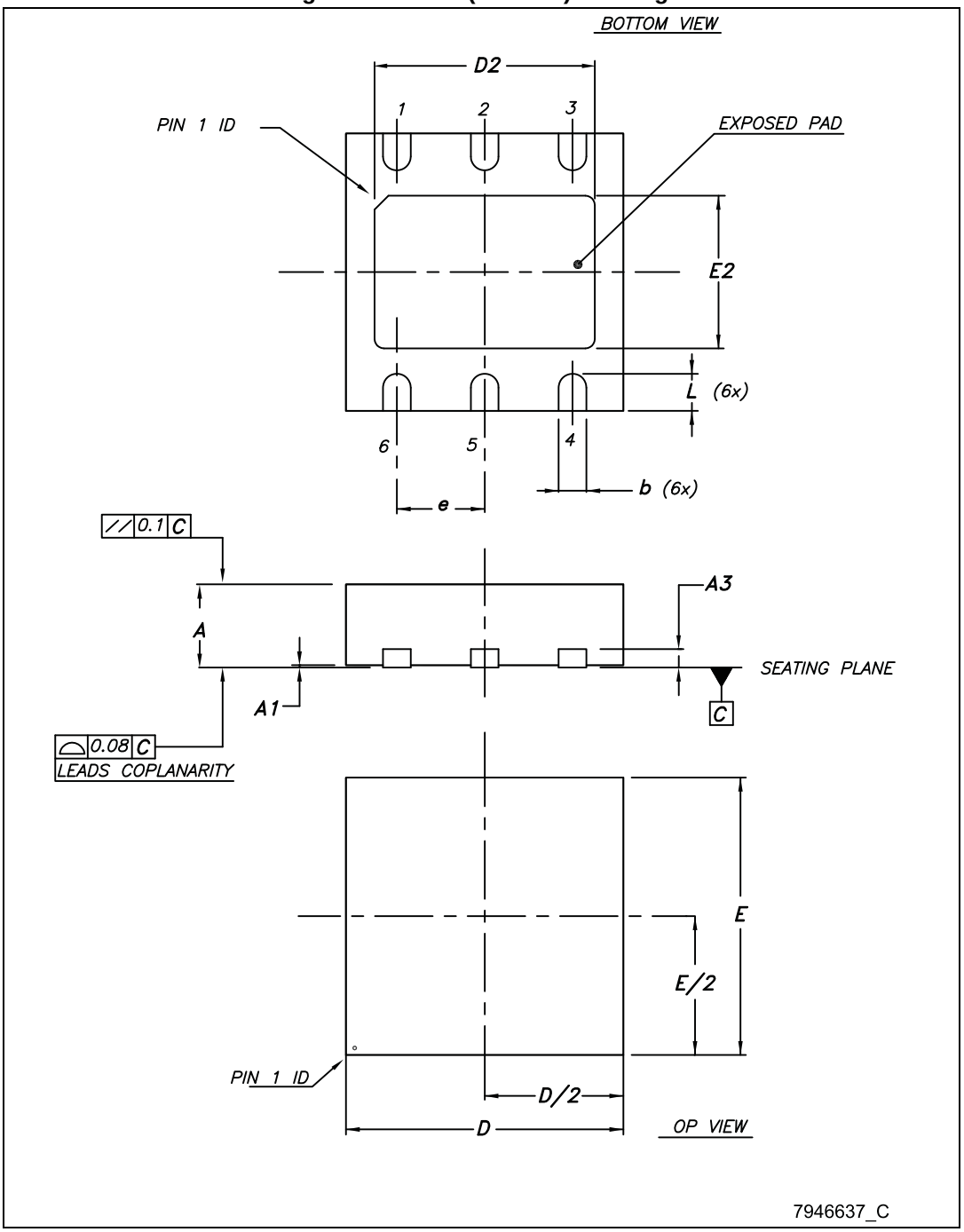

Distributor of STMicroelectronics: Excellent Integrated System Limited
Datasheet of ST1L05DPUR - IC REG LDO ADJ 1.3A 8DFN
Contact us: sales@integrated-circuit.com Website: www.integrated-circuit.com

Table 10. DFN6 (3x3 mm) mechanical data

Dim.	mm		
	Min.	Typ.	Max.
A	0.80		1
A1	0	0.02	0.05
A3		0.20	
b	0.23		0.45
D	2.90	3	3.10
D2	2.23		2.50
E	2.90	3	3.10
E2	1.50		1.75
		0.95	
L	0.30	0.40	0.50

Figure 29. DFN6 (3x3 mm) recommended footprint

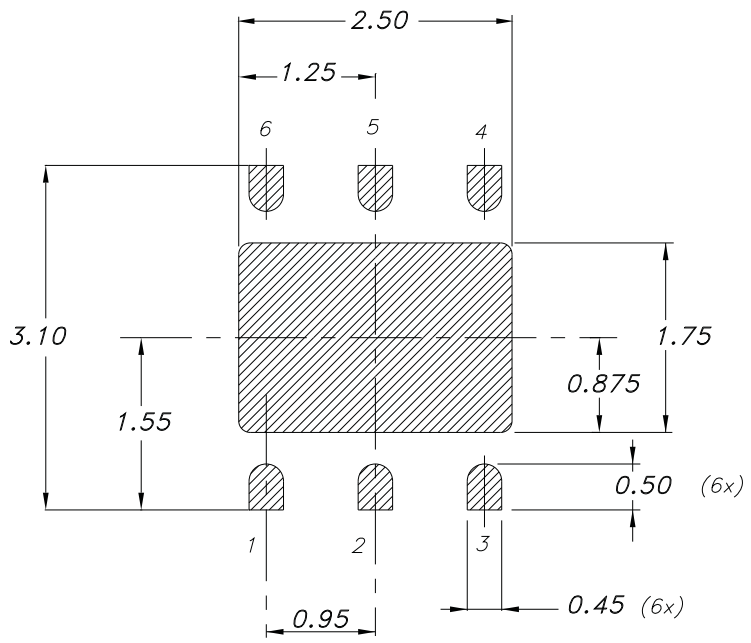

Distributor of STMicroelectronics: Excellent Integrated System Limited
Datasheet of ST1L05DPUR - IC REG LDO ADJ 1.3A 8DFN
Contact us: sales@integrated-circuit.com Website: www.integrated-circuit.com

Figure 30. DFN8 (4x4 mm) drawings

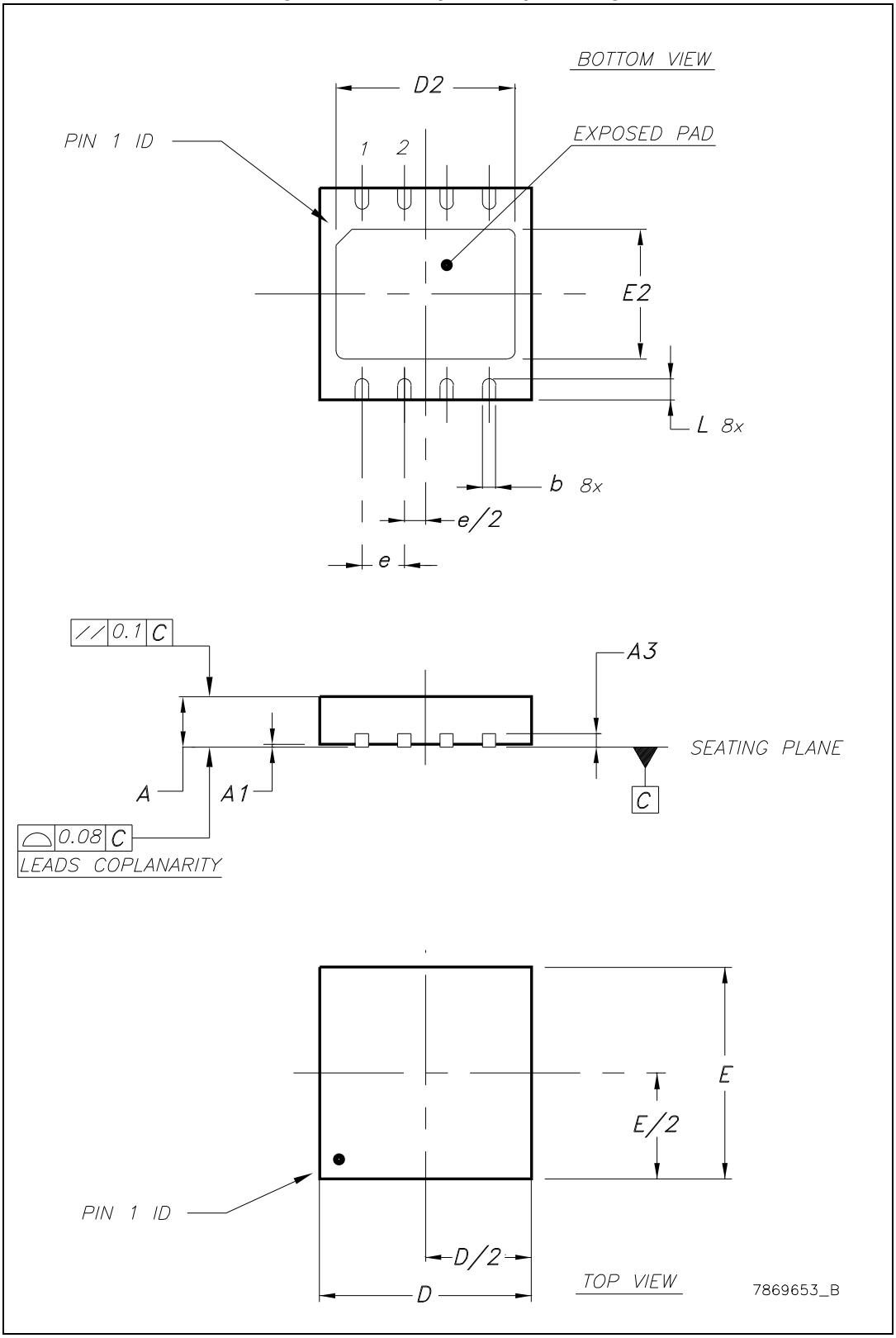

Distributor of STMicroelectronics: Excellent Integrated System Limited
Datasheet of ST1L05DPUR - IC REG LDO ADJ 1.3A 8DFN
Contact us: sales@integrated-circuit.com Website: www.integrated-circuit.com

Table 11.DFN8 (4x4 mm) mechanical data

Dim.	mm		
	Min.	Typ.	Max.
A	0.80	0.90	1
A1	0	0.02	0.05
A3		0,20	
b	0.23	0.30	0.38
D	3.90	4	4.10
D2	2.82	3	3.23
E	3.90	4	4.10
E2	2.05	2.20	2.30
e		0.80	
L	0.40	0.50	0.60

Figure 31. DFN8 (4x4 mm) recommended footprint

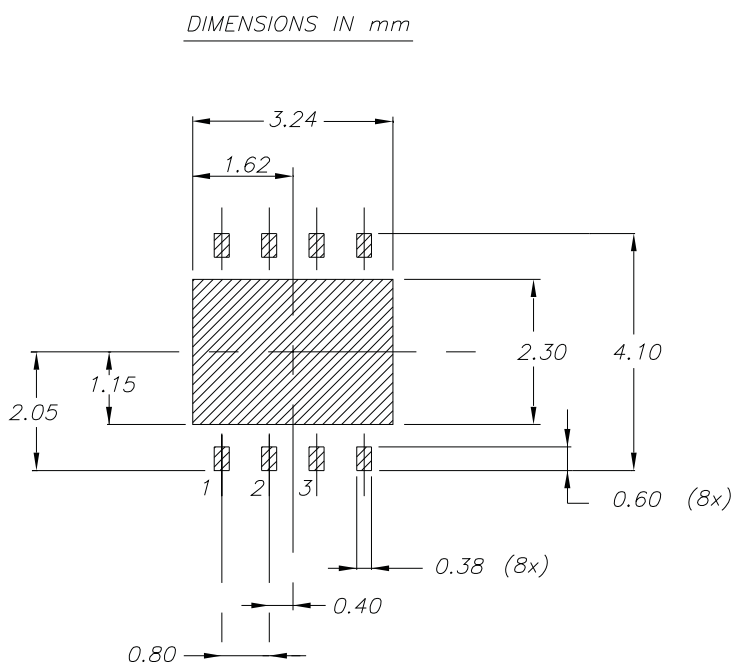

Distributor of STMicroelectronics: Excellent Integrated System Limited
Datasheet of ST1L05DPUR - IC REG LDO ADJ 1.3A 8DFN
Contact us: sales@integrated-circuit.com Website: www.integrated-circuit.com

8 Packaging mechanical data

Figure 32. DFN6 (3x3 mm) tape

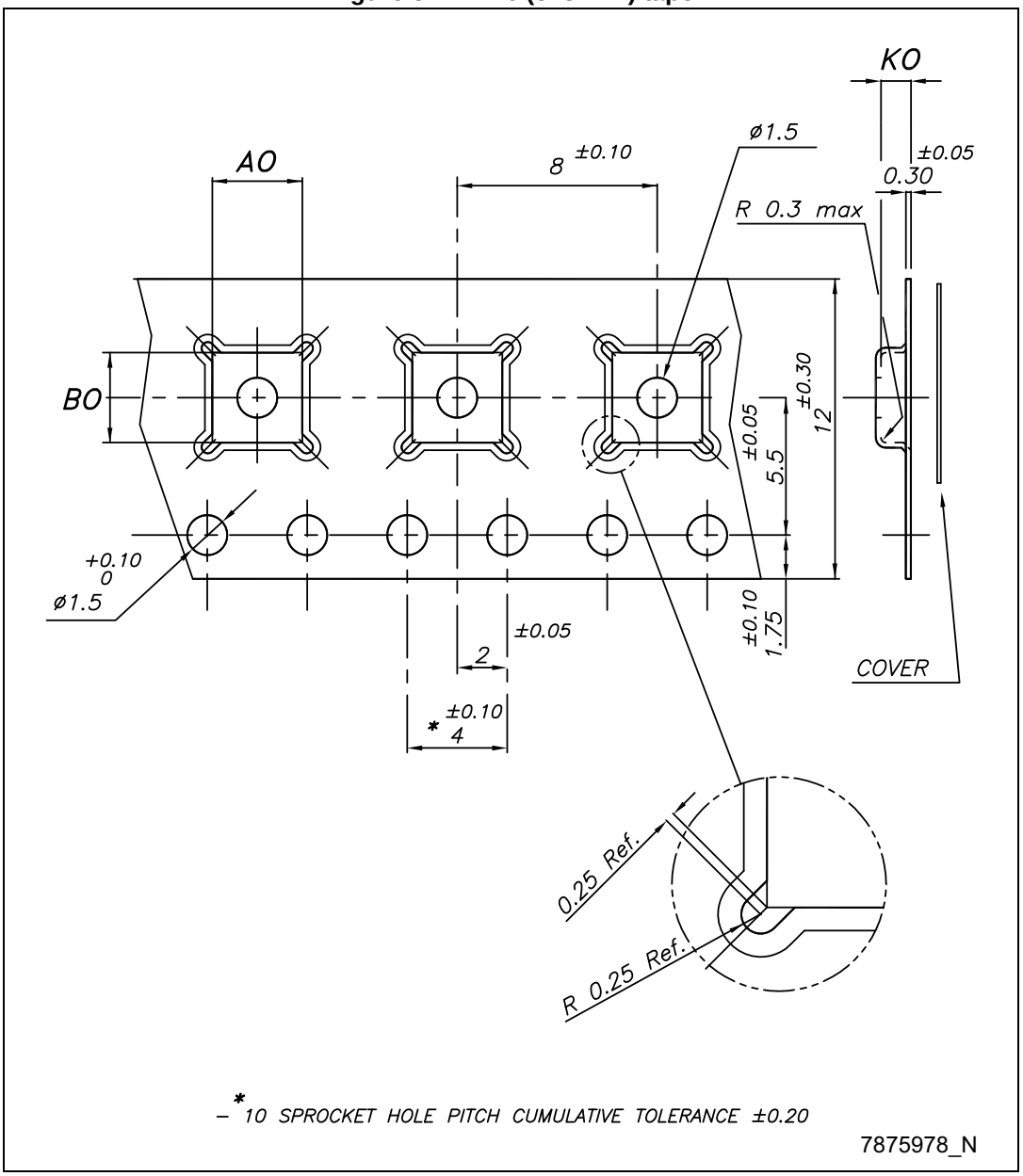

Distributor of STMicroelectronics: Excellent Integrated System Limited
Datasheet of ST1L05DPUR - IC REG LDO ADJ 1.3A 8DFN
Contact us: sales@integrated-circuit.com Website: www.integrated-circuit.com

Figure 33. DFN6 (3x3 mm) reel

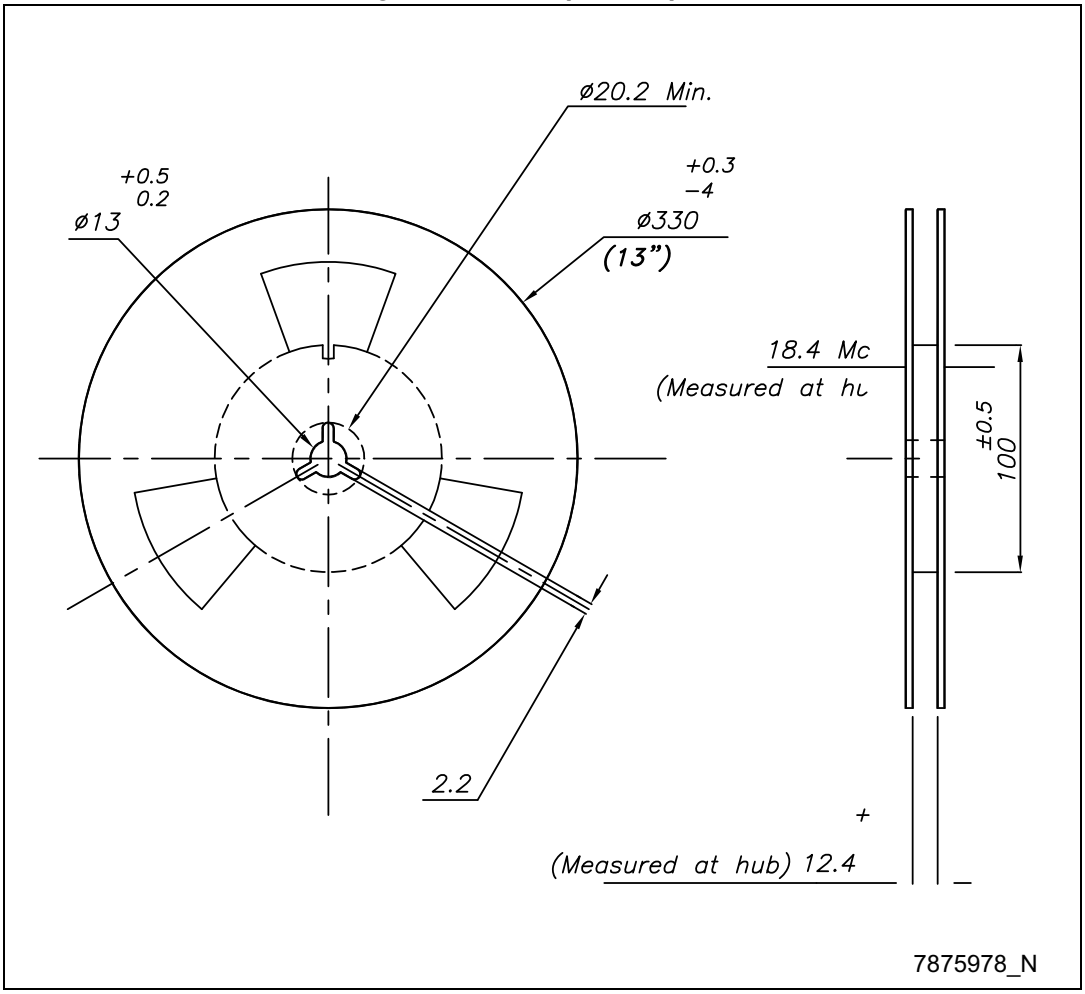

Table 12. DFN6 (3x3 mm) tape and reel mechanical data

Dim.	mm		
	Min.	Typ.	Max.
A0	3.20	3.30	3.40
B0	3.20	3.30	3.40
K0	1	1.10	1.20

Distributor of STMicroelectronics: Excellent Integrated System Limited
Datasheet of ST1L05DPUR - IC REG LDO ADJ 1.3A 8DFN
Contact us: sales@integrated-circuit.com Website: www.integrated-circuit.com

Figure 34. DFN8 (4x4 mm) carrier tape

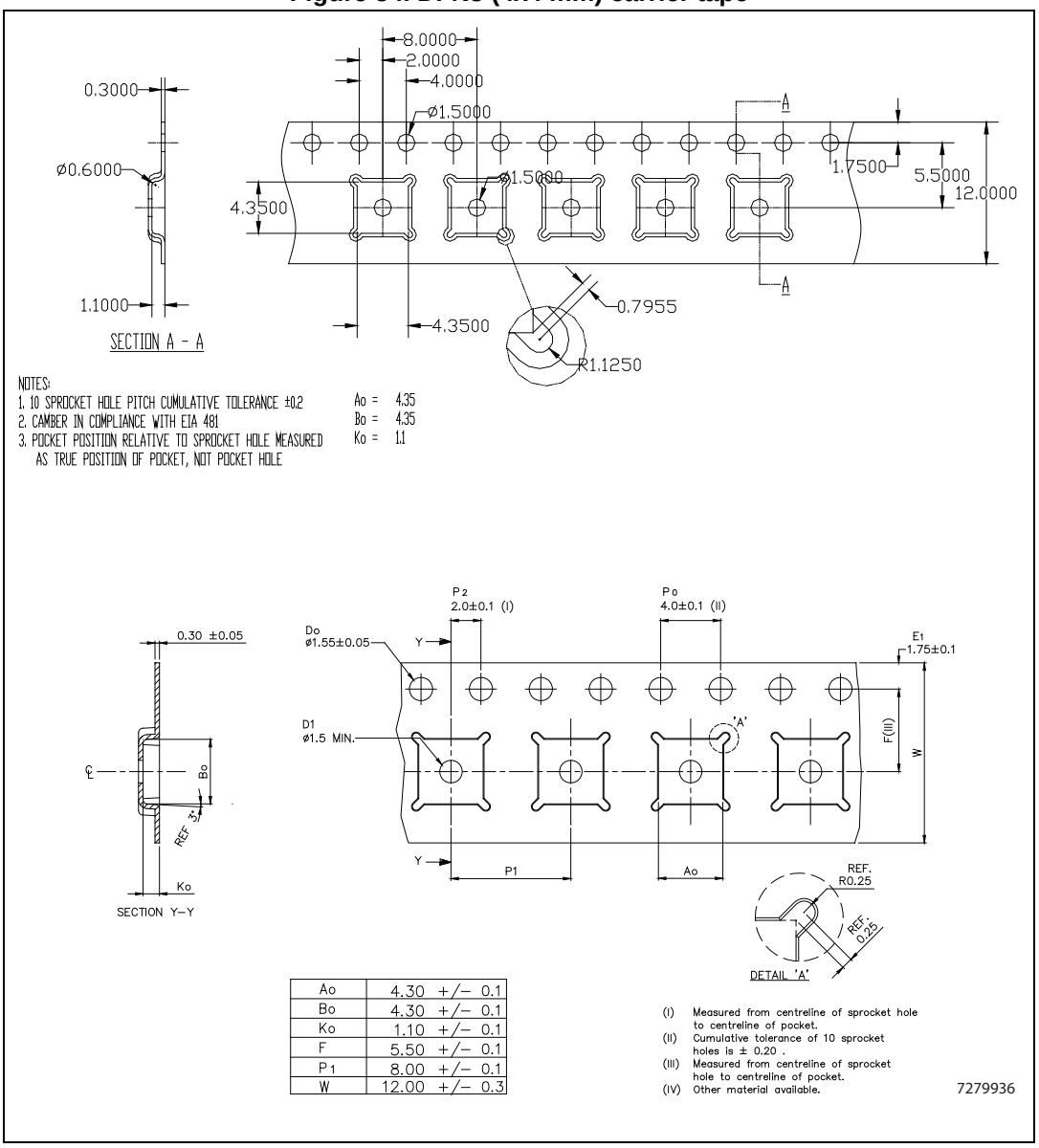

Ao	4.30 +/− 0.1
Bo	4.30 +/− 0.1
Ko	1.10 +/− 0.1
F	5.50 +/− 0.1
P1	8.00 +/− 0.1
W	12.00 +/− 0.3

Distributor of STMicroelectronics: Excellent Integrated System Limited
Datasheet of ST1L05DPUR - IC REG LDO ADJ 1.3A 8DFN
Contact us: sales@integrated-circuit.com Website: www.integrated-circuit.com

Figure 35. DFN8 (4x4 mm) reel

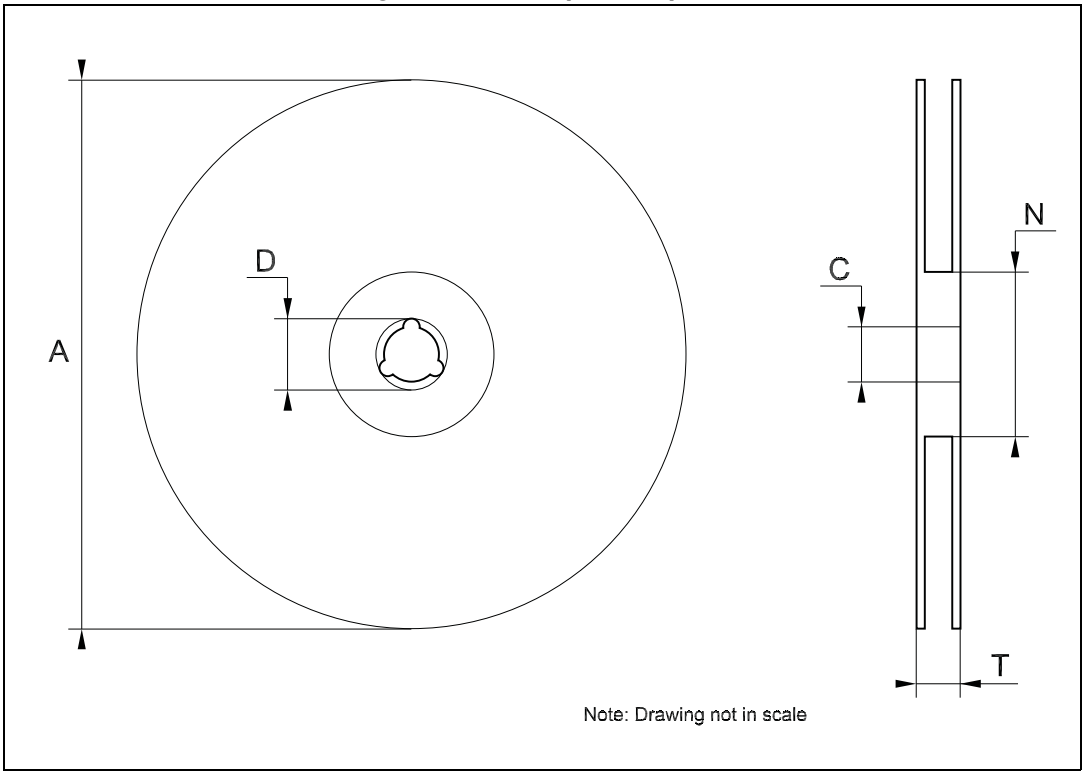

Table 13. DFN8 (4x4 mm) reel mechanical data

Dim.	mm		
	Min.	Typ.	Max.
A			330
C	12.8	13.0	13.2
D	20.2		
N	60		
T			22.4

Distributor of STMicroelectronics: Excellent Integrated System Limited
Datasheet of ST1L05DPUR - IC REG LDO ADJ 1.3A 8DFN
Contact us: sales@integrated-circuit.com Website: www.integrated-circuit.com

9 Revision history

Table 14. Document revision history

Date	Revision	Changes
29-Feb-2008	1	First release.
07-Jul-2009	2	Added: package DFN8 (4 x 4 mm).
05-May-2014	3	Part numbers: ST1L05A, ST1L05B, ST1L05C, ST1L05D have been included in the ST1L05 for product rationalization. Changed title of *Figure 6*, *Figure 7*, *Figure 8*, *Figure 9*, *Figure 16* and *Figure 17*. Updated package mechanical data. Added *Section 8*.

Distributor of STMicroelectronics: Excellent Integrated System Limited
Datasheet of ST1L05DPUR - IC REG LDO ADJ 1.3A 8DFN
Contact us: sales@integrated-circuit.com Website: www.integrated-circuit.com

Please Read Carefully:

Information in this document is provided solely in connection with ST products. STMicroelectronics NV and its subsidiaries (“ST”) reserve the right to make changes, corrections, modifications or improvements, to this document, and the products and services described herein at any time, without notice.

All ST products are sold pursuant to ST’s terms and conditions of sale.

Purchasers are solely responsible for the choice, selection and use of the ST products and services described herein, and ST assumes no liability whatsoever relating to the choice, selection or use of the ST products and services described herein.

No license, express or implied, by estoppel or otherwise, to any intellectual property rights is granted under this document. If any part of this document refers to any third party products or services it shall not be deemed a license grant by ST for the use of such third party products or services, or any intellectual property contained therein or considered as a warranty covering the use in any manner whatsoever of such third party products or services or any intellectual property contained therein.

UNLESS OTHERWISE SET FORTH IN ST’S TERMS AND CONDITIONS OF SALE ST DISCLAIMS ANY EXPRESS OR IMPLIED WARRANTY WITH RESPECT TO THE USE AND/OR SALE OF ST PRODUCTS INCLUDING WITHOUT LIMITATION IMPLIED WARRANTIES OF MERCHANTABILITY, FITNESS FOR A PARTICULAR PURPOSE (AND THEIR EQUIVALENTS UNDER THE LAWS OF ANY JURISDICTION), OR INFRINGEMENT OF ANY PATENT, COPYRIGHT OR OTHER INTELLECTUAL PROPERTY RIGHT.

ST PRODUCTS ARE NOT DESIGNED OR AUTHORIZED FOR USE IN: (A) SAFETY CRITICAL APPLICATIONS SUCH AS LIFE SUPPORTING, ACTIVE IMPLANTED DEVICES OR SYSTEMS WITH PRODUCT FUNCTIONAL SAFETY REQUIREMENTS; (B) AERONAUTIC APPLICATIONS; (C) AUTOMOTIVE APPLICATIONS OR ENVIRONMENTS, AND/OR (D) AEROSPACE APPLICATIONS OR ENVIRONMENTS. WHERE ST PRODUCTS ARE NOT DESIGNED FOR SUCH USE, THE PURCHASER SHALL USE PRODUCTS AT PURCHASER’S SOLE RISK, EVEN IF ST HAS BEEN INFORMED IN WRITING OF SUCH USAGE, UNLESS A PRODUCT IS EXPRESSLY DESIGNATED BY ST AS BEING INTENDED FOR “AUTOMOTIVE, AUTOMOTIVE SAFETY OR MEDICAL” INDUSTRY DOMAINS ACCORDING TO ST PRODUCT DESIGN SPECIFICATIONS. PRODUCTS FORMALLY ESCC, QML OR JAN QUALIFIED ARE DEEMED SUITABLE FOR USE IN AEROSPACE BY THE CORRESPONDING GOVERNMENTAL AGENCY.

Resale of ST products with provisions different from the statements and/or technical features set forth in this document shall immediately void any warranty granted by ST for the ST product or service described herein and shall not create or extend in any manner whatsoever, any liability of ST.

ST and the ST logo are trademarks or registered trademarks of ST in various countries.
Information in this document supersedes and replaces all information previously supplied.
The ST logo is a registered trademark of STMicroelectronics. All other names are the property of their respective owners.

© 2014 STMicroelectronics - All rights reserved

STMicroelectronics group of companies

Australia - Belgium - Brazil - Canada - China - Czech Republic - Finland - France - Germany - Hong Kong - India - Israel - Italy - Japan - Malaysia - Malta - Morocco - Philippines - Singapore - Spain - Sweden - Switzerland - United Kingdom - United States of America

www.st.com