Excellent Integrated System Limited

Stocking Distributor

Click to view price, real time Inventory, Delivery & Lifecycle Information:

Molex Connector Corporation
0526101675

For any questions, you can email us directly:
sales@integrated-circuit.com

Distributor of Molex Connector Corporation: Excellent Integrated System Limited
Datasheet of 0526101675 - CONN FPC VERT 16POS 1.00MM SMD
Contact us: sales@integrated-circuit.com Website: www.integrated-circuit.com

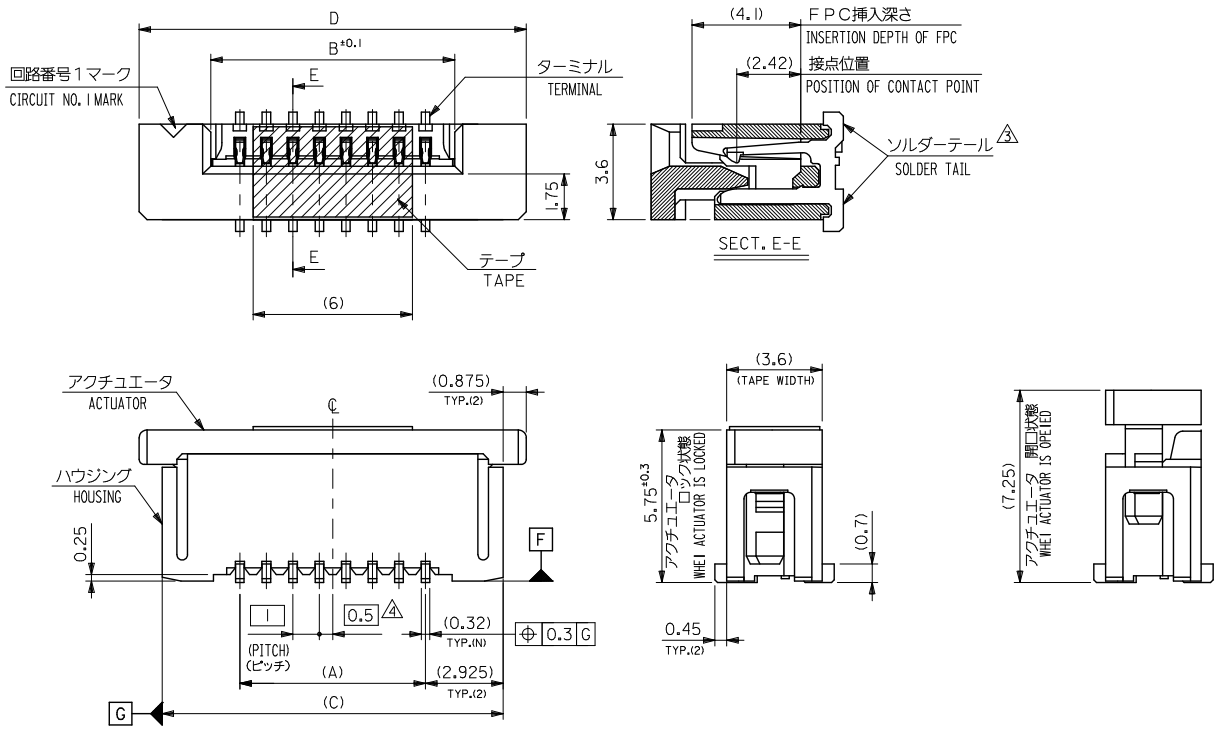

REVISED EC NO: J2014-0169 DRWN:NINOUE01 2013/07/25 CHKD:HIJIMA 2013/07/29 APPR:YNOGAWA 2013/08/05 DESCRIPTION	GENERAL TOLERANCES (UNLESS SPECIFIED) 10 UNDER ±0.2 10 OVER 30 UNDER ±0.25 30 OVER ±0.3 ANGULAR ±3 ° DRAFT WHERE APPLICABLE MUST REMAIN WITHIN DIMENSIONS	DIMENSION STYLE: MM ONLY DRAWN BY: H.SHIMABUKUR DATE: '04/3/17 CHECKED BY: K.TOJO DATE: '04/3/17 APPROVED BY: M.SASAO DATE: '04/3/17 MATERIAL NO.: SEE CHART	SCALE: --- DESIGN UNITS: METRIC THIRD ANGLE PROJECTION TITLE: 1.0 FPC CONN ZIF FOR SMT (ST)WITH TAPE -LEAD FREE- molex DOCUMENT NO.: SD-52610-034 SHEET NO.: 1 OF 2
REV: B		SIZE: A3	THIS DRAWING CONTAINS INFORMATION THAT IS PROPRIETARY TO MOLEX INCORPORATED AND SHOULD NOT BE USED WITHOUT WRITTEN PERMISSION

tb_frame_A3_J_ME_S
Rev G 2012/01/25

Distributor of Molex Connector Corporation: Excellent Integrated System Limited
Datasheet of 0526101675 - CONN FPC VERT 16POS 1.00MM SMD
Contact us: sales@integrated-circuit.com Website: www.integrated-circuit.com

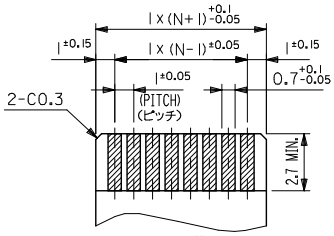

適合ＦＰＣ推奨寸法
APPLICABLE FPC RECOMMENDED DIM.
仕上がり厚さ(THICKNESS)：0.3 ±0.05

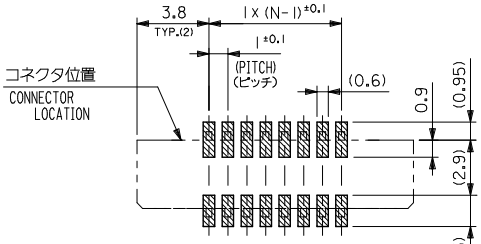

参考基板レイアウト
P.C.BOARD PATTERN LAYOUT
(REFERENCE)

36.6	34.85	31.2	29	52610-3059	30
35.6	33.85	30.2	28	-2959	29
34.6	32.85	29.2	27	-2859	28
33.6	31.85	28.2	26	-2759	27
32.6	30.85	27.2	25	-2659	26
31.6	29.85	26.2	24	-2559	25
30.6	28.85	25.2	23	-2459	24
29.6	27.85	24.2	22	-2359	23
28.6	26.85	23.2	21	-2259	22
27.6	25.85	22.2	20	-2159	21
26.6	24.85	21.2	19	-2059	20
25.6	23.85	20.2	18	-1959	19
23.6	21.85	18.2	16	-1759	17
22.6	20.85	17.2	15	-1659	16
21.6	19.85	16.2	14	-1559	15
20.6	18.85	15.2	13	-1459	14
19.6	17.85	14.2	12	-1359	13
18.6	16.85	13.2	11	-1259	12
17.6	15.85	12.2	10	-1159	11
16.6	14.85	11.2	9	-1059	10
15.6	13.85	10.2	8	-0959	9
14.6	12.85	9.2	7	-0859	8
13.6	11.85	8.2	6	-0759	7
12.6	10.85	7.2	5	52610-0659	6
D	(C)	B	(A)	MATERIAL. NO.	CKT.

注記(NOTES)：

1. 材料(MATERIAL)
   ハウジング(HOUSING)：46NYLON ，UL94V-0
   アクチュエータ(ACTUATOR)：PPS ，UL94V-0
   ターミナル(TERMINAL)：リン青銅、ニッケル下地、錫-ビスマスメッキ （t0. 32）
   PHOS-BRO. TIN-BISMUTH OVER NICKEL PLATED Ⓐ
2. エンボステープ梱包時は、アクチュエータがロックした状態とする。
   IN THE PACKAGE ,ACTUATOR OF PART NO.52610-**59 SHOULD BE LOCKED.
3. ソルダーテール半田付け面のズレ量は、基準面 F に対し上方向 0.05 MAX. 下方向 0.15 MAX.とする。
   MISALIGNMENT OF SOLDER TAILS FROM F UPPER DIRECTION :0.05 MAX., LOWER DIRECTION :0.15 MAX.
4. 偶数極に適用。
   APPLY FOR EVEN CIRCUIT.
5. 本製品は 52610-**57 の鉛フリー品である。
   THIS PRODUCT IS LEAD FREE OF 52610-**57

REVISED
EC NO: J2014-0169 2013/07/25
DRWN:NINOUE01 2013/07/29
CHKD:HIJIMA 2013/08/05
APPR:YNOGAWA
DESCRIPTION
REV B

GENERAL TOLERANCES (UNLESS SPECIFIED)
10 UNDER ±0.2
10 OVER 30 UNDER ±0.25
30 OVER ±0.3
ANGULAR ±3 °
DRAFT WHERE APPLICABLE MUST REMAIN WITHIN DIMENSIONS

DIMENSION STYLE: MM ONLY
SCALE: ---
DESIGN UNITS: METRIC
THIRD ANGLE PROJECTION

DRAWN BY: H.SHIMABUKUR DATE: '04/3/17
CHECKED BY: K.TOJO DATE: '04/3/17
APPROVED BY: M.SASAO DATE: '04/3/17

TITLE: 1.0 FPC CONN ZIF FOR SMT (ST)WITH TAPE -LEAD FREE-

molex

MATERIAL NO.: SEE CHART
DOCUMENT NO.: SD-52610-034
SHEET NO.: 2 OF 2
SIZE: A3

THIS DRAWING CONTAINS INFORMATION THAT IS PROPRIETARY TO MOLEX INCORPORATED AND SHOULD NOT BE USED WITHOUT WRITTEN PERMISSION

tb_frame_A3_J_ME_S
Rev G 2012/01/25

Distributor of Molex Connector Corporation: Excellent Integrated System Limited
Datasheet of 0526101675 - CONN FPC VERT 16POS 1.00MM SMD
Contact us: sales@integrated-circuit.com Website: www.integrated-circuit.com

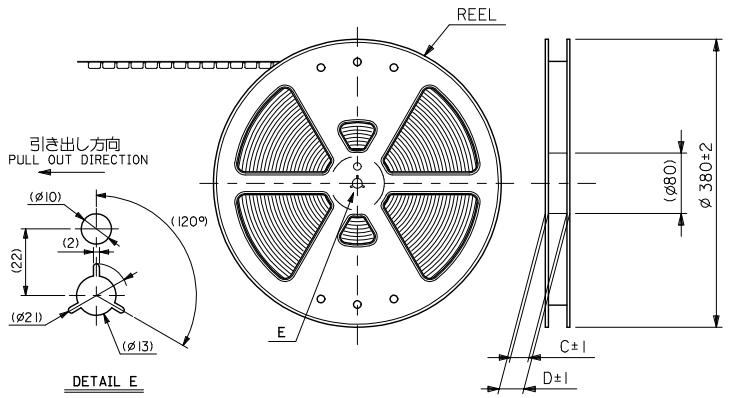

NOTES

1. 梱包数量：１０００個／リール
   NUMBER OF CONNECTORS : 1000PCS/REEL
2. リードテープ長さ LEAD TAPE LENGTH

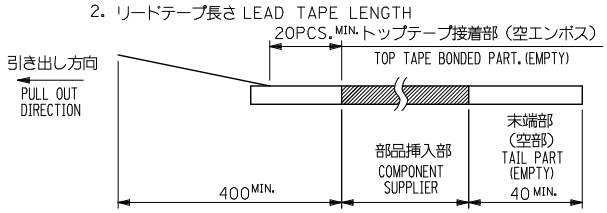

3. トップテープの剥離強度：0.1N ～ 1.3N{10gf ～ 130gf}
   （剥離方向は下図参照）
   尚、本規格値は出荷時に適用。（但し、輸送時に剥離が発生しないこと。）
   PEELING OFF FORCE OF TOP TAPE : 0.1N ～ 1.3N{10gf ～ 130gf}
   (PEELING DIRECTION AS SHOWN IN FOLLOWING FIG.)
   THIS REQUIREMENT SHOULD BE APPLIED AT SHIPMENT.
   PEEL OFF SHOULD NOT BE ALLOWED , DURING TRANSPORTATION.

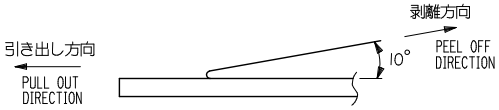

4. 52610-**59のアクチュエータはハウジング内に押し下げた状態とする。
   詳細寸法については 製品単体図面を参照下さい。
   ACTUATOR OF PART NO. 52610-**59 SHULD BE LOCKED.
   FOR DETAIL OF CONNECTOR DIMENSIONS, PLEASE SEE THE DRAWING OF ITSELF.
5. 材料(MATERIAL)
   キャリアテープ(CARRIER TAPE)：ポリプロピレン(POLYPROPYLENE)
   トップテープ(TOPTAPE)： PET , PE , PEF
   リール(REEL)：ポリスチレン（PS）<リサイクル材を含む>
   POLYSTYRENE(PS) <RECYCLE MATERIAL CONTAINED>
6. 本製品は　５２６１０－＊＊９４　の鉛フリー品である。
   THIS PRODUCT IS LEAD FREE OF 52610-**94
7. 本製品は乾燥剤入り、ハイバリア梱包仕様である。
   THIS PRODUCT IS HIGH BARRIER PACKAGE WITH DESICCANT.

52610-**75	MODEL NO.					
REVISED EC NO: J2014-0169 DRWN:NINOUE01 2013/07/25 CHKD:HIJIMA 2013/07/29 APPR:YNOGAWA 2013/08/05	GENERAL TOLERANCES (UNLESS SPECIFIED)	DIMENSION STYLE MM ONLY	SCALE ---	DESIGN UNITS METRIC	THIRD ANGLE PROJECTION	
	10 UNDER ±0.3	DRAWN BY H.SHIMABUKUR DATE 2004/03/17	TITLE 1.0 FPC CONN SMT ZIF WITH TAPE EMBSTP PKG -LEAD FREE-			
	10 OVER 30 UNDER ±0.25	CHECKED BY K.TOJO DATE 2004/03/17				
	30 OVER ±0.2	APPROVED BY M.SASAO DATE 2004/03/17	molex			
	ANGULAR ±3 °	MATERIAL NO. SEE CHART	DOCUMENT NO. SD-52610-035	SHEET NO. 1 OF 5		
REV B	DRAFT WHERE APPLICABLE MUST REMAIN WITHIN DIMENSIONS	SIZE A3	THIS DRAWING CONTAINS INFORMATION THAT IS PROPRIETARY TO MOLEX INCORPORATED AND SHOULD NOT BE USED WITHOUT WRITTEN PERMISSION			

tb_frame_A3_J_ME_S
Rev G 2012/01/25

Distributor of Molex Connector Corporation: Excellent Integrated System Limited
Datasheet of 0526101675 - CONN FPC VERT 16POS 1.00MM SMD
Contact us: sales@integrated-circuit.com Website: www.integrated-circuit.com

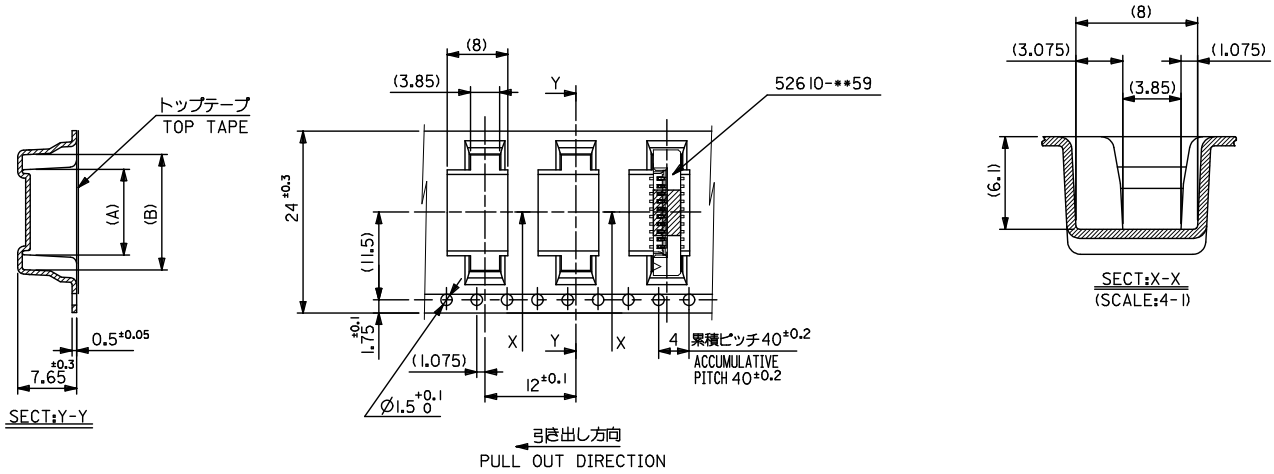

526 10-**75							
MODEL. NO.							
キャリアテープ幅 CARRIER TAPE WIDTH	D	C	(B)	(A)	MATERIAL. NO.	極数 CKT.	
24	29.4	25.4	15.25	11.32	526 10-1075	10	
			14.25	10.32	526 10-0975	9	
			13.25	9.32	526 10-0875	8	
			12.25	8.32	526 10-0775	7	
			11.25	7.32	526 10-0675	6	

REVISED
EC NO: J2014-0169 2013/07/25
DRWN:NINOUE01 2013/07/29
CHKD:HIJIMA 2013/08/05
APPR:YNOGAWA
DESCRIPTION
REV B

GENERAL TOLERANCES (UNLESS SPECIFIED)

10 UNDER	±0.3
10 OVER 30 UNDER	±0.25
30 OVER	±0.2
ANGULAR	±3 °

DRAFT WHERE APPLICABLE MUST REMAIN WITHIN DIMENSIONS

DIMENSION STYLE: MM ONLY
SCALE: ---
DESIGN UNITS: METRIC
THIRD ANGLE PROJECTION

DRAWN BY: H.SHIMABUKUR DATE: 2004/03/17
CHECKED BY: K.TOJO DATE: 2004/03/17
APPROVED BY: M.SASAO DATE: 2004/03/17
MATERIAL NO.: SEE CHART

TITLE: 1.0 FPC CONN SMT ZIF WITH TAPE EMBSTP PKG -LEAD FREE-

molex

DOCUMENT NO.: SD-52610-035
SHEET NO.: 2 OF 5
SIZE: A3

THIS DRAWING CONTAINS INFORMATION THAT IS PROPRIETARY TO MOLEX INCORPORATED AND SHOULD NOT BE USED WITHOUT WRITTEN PERMISSION

tb_frame_A3_J_ME_S
Rev G 2012/01/25

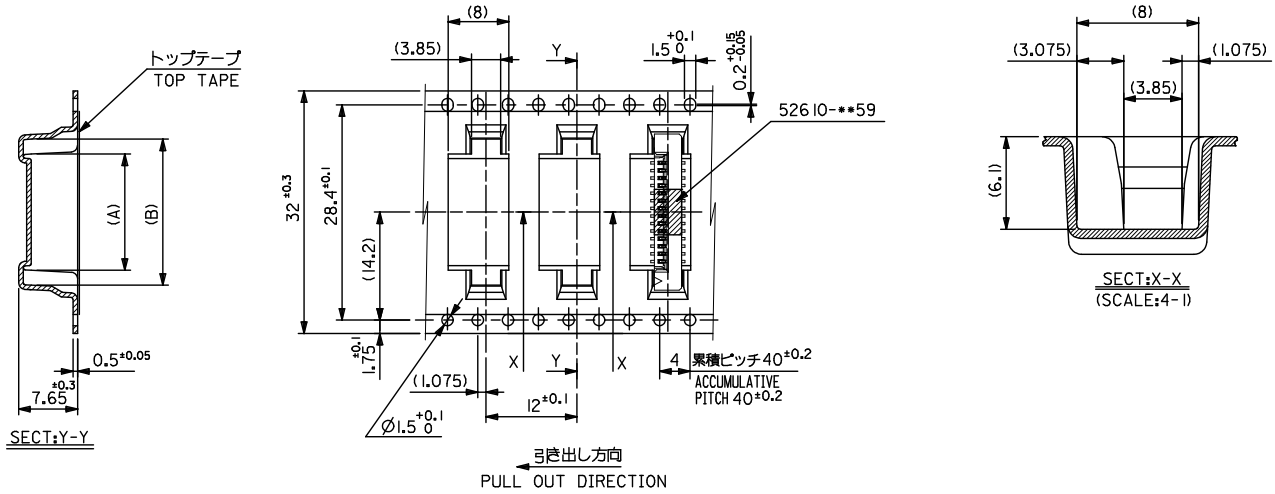

MODEL NO.	キャリアテープ幅 CARRIER TAPE WIDTH	D	C	(B)	(A)	MATERIAL. NO.	極数 CKT.
52610-**75	32	37.4	33.4	20.25	16.32	52610-1575	15
				19.25	15.32	52610-1475	14
				18.25	14.32	52610-1375	13
				17.25	13.32	52610-1275	12

REV	DESCRIPTION	
B	REVISED EC NO: J2014-0169 DRWN:NINOUE01 2013/07/25 CHKD:HIJIMA 2013/07/29 APPR:YNOGAWA 2013/08/05	

GENERAL TOLERANCES (UNLESS SPECIFIED)

10 UNDER	±0.3
10 OVER 30 UNDER	±0.25
30 OVER	±0.2
ANGULAR	±3 °

DRAFT WHERE APPLICABLE MUST REMAIN WITHIN DIMENSIONS

DIMENSION STYLE: MM ONLY
SCALE: ---
DESIGN UNITS: METRIC
THIRD ANGLE PROJECTION

DRAWN BY: H.SHIMABUKUR DATE: 2004/03/17
CHECKED BY: K.TOJO DATE: 2004/03/17
APPROVED BY: M.SASAO DATE: 2004/03/17
MATERIAL NO.: SEE CHART

TITLE: 1.0 FPC CONN SMT ZIF WITH TAPE EMBSTP PKG -LEAD FREE-

molex

DOCUMENT NO.: SD-52610-035
SHEET NO.: 3 OF 5
SIZE: A3

THIS DRAWING CONTAINS INFORMATION THAT IS PROPRIETARY TO MOLEX INCORPORATED AND SHOULD NOT BE USED WITHOUT WRITTEN PERMISSION

tb_frame_A3_J_ME_S
Rev G 2012/01/25

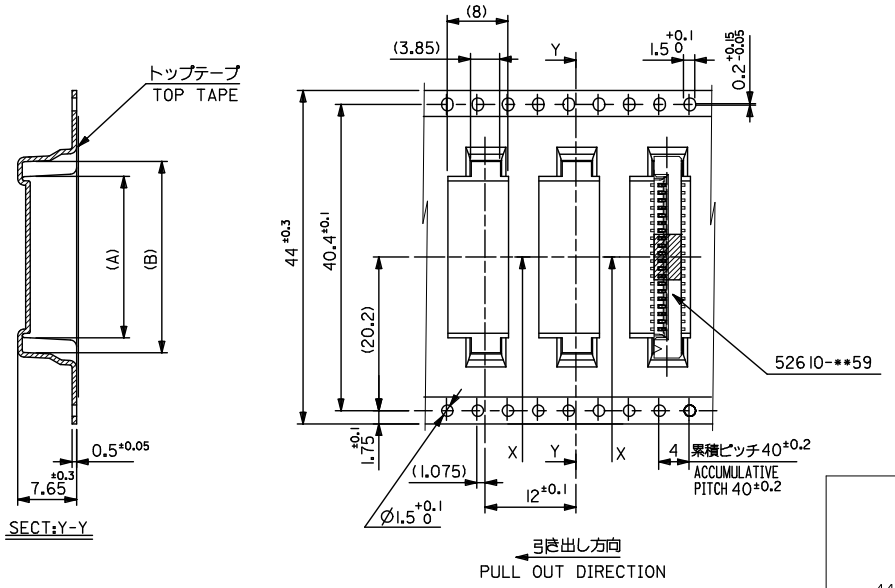

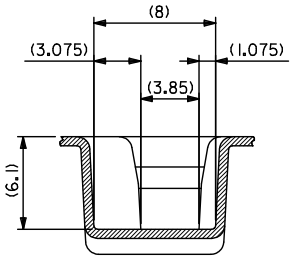

SECT:X-X
(SCALE:4-1)

キャリアテープ幅 CARRIER TAPE WIDTH	D	C	(B)	(A)	MATERIAL. NO.	極数 CKT.
44	49.4	45.4	31.25	27.32	526 10-2675	26
			30.25	26.32	526 10-2575	25
			29.25	25.32	526 10-2475	24
			28.25	24.32	526 10-2375	23
			27.25	23.32	526 10-2275	22
			26.25	22.32	526 10-2175	21
			25.25	21.32	526 10-2075	20
			24.25	20.32	526 10-1975	19
			21.25	17.32	526 10-1675	16

MODEL. NO.	
526 10-**75	

REV	DESCRIPTION	
B	REVISED EC NO: J2014-0169 DRWN:NINOUE01 2013/07/25 CHKD:HIJIMA 2013/07/29 APPR:YNOGAWA 2013/08/05	

GENERAL TOLERANCES (UNLESS SPECIFIED)

10 UNDER	±0.3
10 OVER 30 UNDER	±0.25
30 OVER	±0.2
ANGULAR	±3 °

DRAFT WHERE APPLICABLE MUST REMAIN WITHIN DIMENSIONS

DIMENSION STYLE: MM ONLY	SCALE: ---	DESIGN UNITS: METRIC	THIRD ANGLE PROJECTION
DRAWN BY: H.SHIMABUKUR DATE: 2004/03/17	TITLE: 1.0 FPC CONN SMT ZIF WITH TAPE EMBOSTP PKG -LEAD FREE-		
CHECKED BY: K.TOJO DATE: 2004/03/17			
APPROVED BY: M.SASAO DATE: 2004/03/17	molex		
MATERIAL NO.: SEE CHART	DOCUMENT NO.: SD-52610-035	SHEET NO.: 4 OF 5	
SIZE: A3	THIS DRAWING CONTAINS INFORMATION THAT IS PROPRIETARY TO MOLEX INCORPORATED AND SHOULD NOT BE USED WITHOUT WRITTEN PERMISSION		

tb_frame_A3_J_ME_S
Rev G 2012/01/25

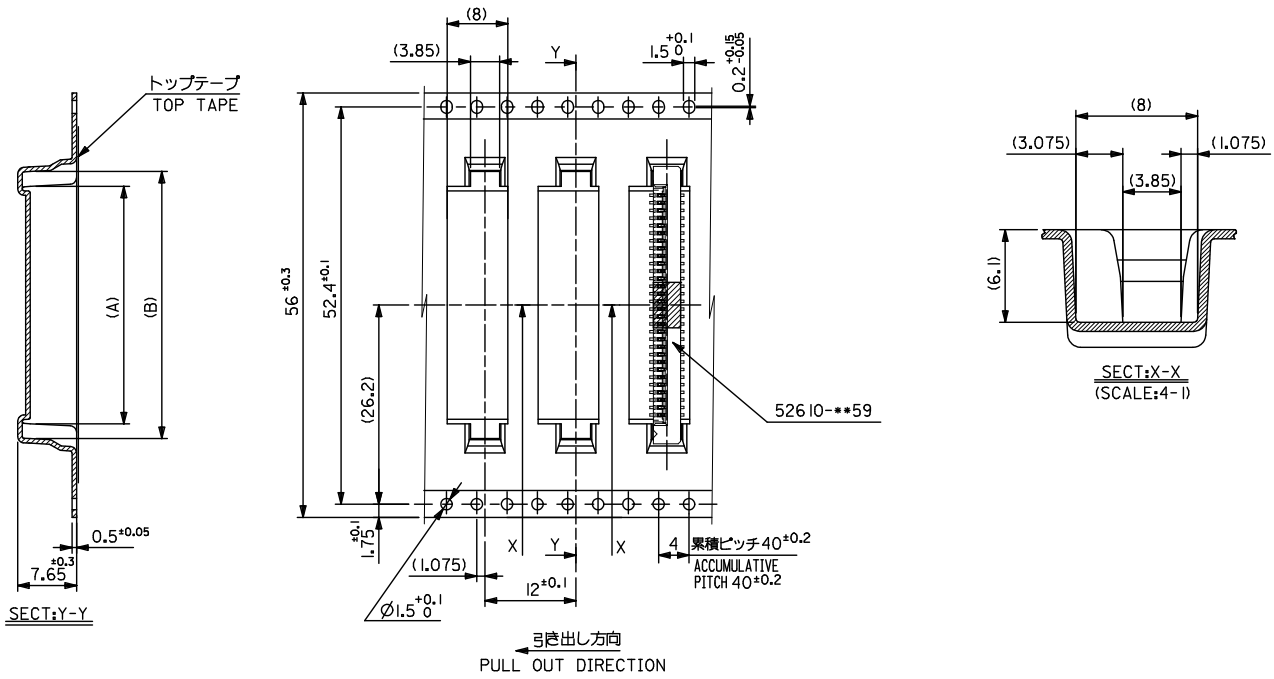

MODEL.NO.	56	61.4	57.4	35.25	31.32	526 10-3075	30
526 10-**75				33.25	29.32	526 10-2875	28
	キャリアテープ幅 CARRIER TAPE WIDTH	D	C	(B)	(A)	MATERIAL. NO.	極数 CKT.

REV	DESCRIPTION	DATE
B	REVISED EC NO: J2014-0169	2013/07/25
	DRWN:NINOUE01	2013/07/29
	CHKD:HIJIMA	2013/08/05
	APPR:YNOGAWA	

GENERAL TOLERANCES (UNLESS SPECIFIED)

10 UNDER	±0.3
10 OVER 30 UNDER	±0.25
30 OVER	±0.2
ANGULAR	±3 °

DRAFT WHERE APPLICABLE MUST REMAIN WITHIN DIMENSIONS

DIMENSION STYLE: MM ONLY	SCALE: ---	DESIGN UNITS: METRIC	THIRD ANGLE PROJECTION
DRAWN BY: H.SHIMABUKUR	DATE: 2004/03/17	TITLE: 1.0 FPC CONN SMT ZIF WITH TAPE EMBSTP PKG -LEAD FREE-	
CHECKED BY: K.TOJO	DATE: 2004/03/17		
APPROVED BY: M.SASAO	DATE: 2004/03/17	molex	
MATERIAL NO.: SEE CHART		DOCUMENT NO.: SD-52610-035	SHEET NO.: 5 OF 5
SIZE: A3	THIS DRAWING CONTAINS INFORMATION THAT IS PROPRIETARY TO MOLEX INCORPORATED AND SHOULD NOT BE USED WITHOUT WRITTEN PERMISSION		

tb_frame_A3_J_ME_S
Rev G 2012/01/25