Excellent Integrated System Limited

Stocking Distributor

Click to view price, real time Inventory, Delivery & Lifecycle Information:

Mallory Sonalert Products
SCE016XD2MP1B

For any questions, you can email us directly:
sales@integrated-circuit.com

Mallory Sonalert Products,Inc.

Part #: **SCE016XD2MP1B**

Sales Outline Drawing

Revision: **A**

Specifications:

Sound Level Category	Extra Loud
Mode of Operation	Medium Pulse @ 5 PPS
Voltage Rating	6 to 16 VDC
Frequency	2000 ± 500 Hz
Loudness @ 2 FT	95 to 105 dB(A) Typ.
Current Draw	40mA MAX
Housing Material	6/6 Nylon, Color: Black
Storage Temperature	-40° to +85° C
Operating Temperature	-40° to +85° C
Panel Mounting	Recommended hole size is 1.25"(31.75mm). Thread front will fit standard 30mm(1.181") hole.
Knurled Nut	Used to attach part to panel. The max recommended torque is 10 in-lbs.
Weight (Typical)	2.1 oz (60g)
NEMA 3R,4X, & 12	Approved with use of ACC03.
cUL Recognition	cUL Recognized
Options	Please contact factory.

Dimensions: Inches (mm)
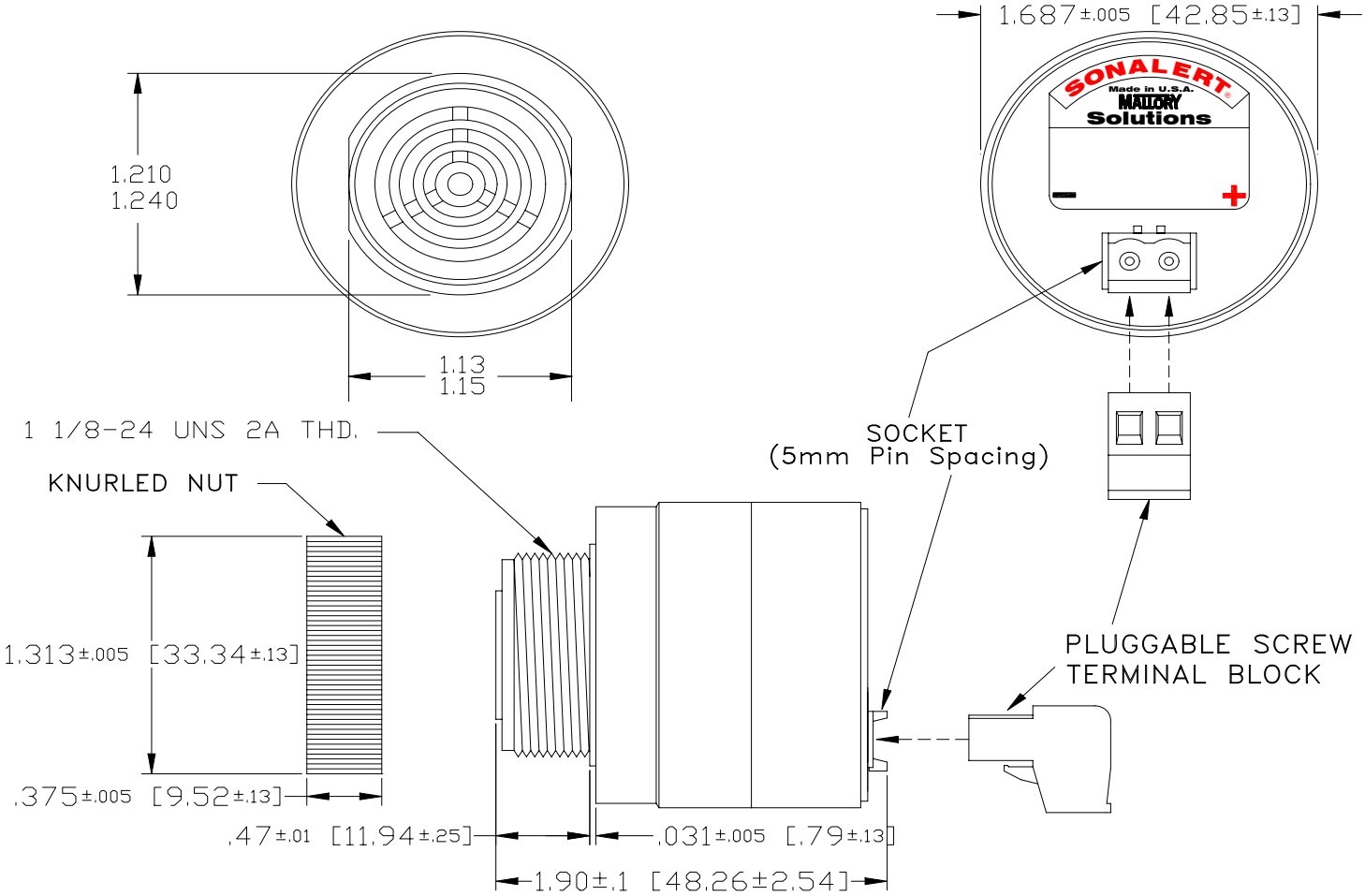
cUL Recognized **ROHS Compliant**