Excellent Integrated System Limited

Stocking Distributor

Click to view price, real time Inventory, Delivery & Lifecycle Information:

ITT Cannon, LLC
CA3100F28-11PB

For any questions, you can email us directly:
sales@integrated-circuit.com

Distributor of ITT Cannon, LLC: Excellent Integrated System Limited
Datasheet of CA3100F28-11PB - CONN RCPT 22POS WALL MNT W/PINS
Contact us: sales@integrated-circuit.com Website: www.integrated-circuit.com

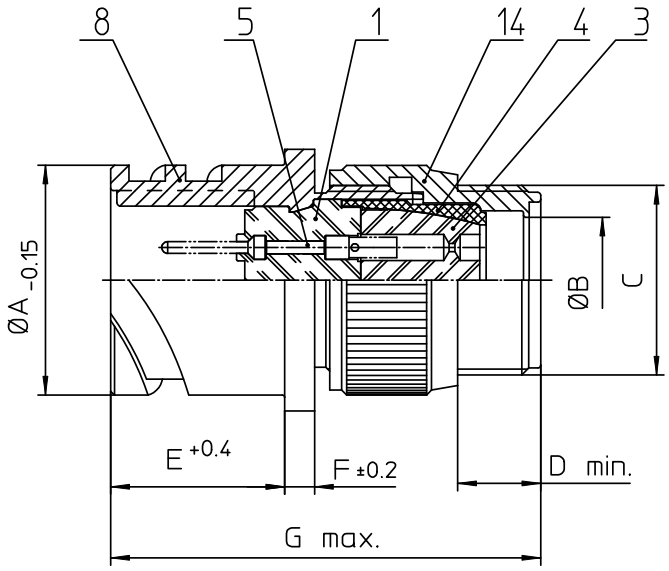

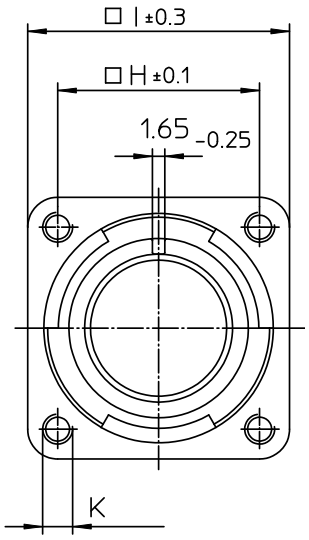

NO.	MASSE / DIMENSIO
A	46.7
B	27
C	1 7/16-18UNEF-2A
D	9.5
E	24.05
F	4
G	64
H	39.7
I	50.8
K	M5

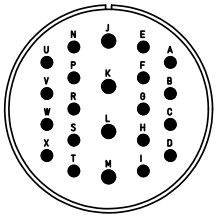

NO.	BESCHREIBUNG / DESCRIPTION
1	ISOLIERKÖRPER STIFT / INSULATOR PIN
3	DICHTKÖRPER / GROMMET
4	ENDRING / ENDRING
5	KONTAKTSTIFT/ CONTACT PIN
8	DOSENGEHÄUSE / SHELL
14	F-ENDGEHÄUSE / F-ENDBELL

Note: Due to an automatic nomenclature system, numbers generated may not be sequential.

Specification and Dimensions subject to chang
Drawings illustrate normal insulator positioning

Material Specification:	
Shell Material:	Aluminium alloy
Shell Plating:	Olive drab chromate over cadmium (conductive)
Insulator Material:	CR-Elastomere
Contact Material:	Copper alloy
Contact Plating:	Hard silver

all dimensions are in mm
Dimensions without tolerance indications are general tolerances in acc. with DIN7168m

drawing for CUSTOMER

ITT
Engineered for life
ITT CANNON GmbH
D - 71384 Weinstadt/Germany

description CA3100F28-11P-B
Wall mounting receptacle
Endbell for flex tube
Solder Cup / Pin / Layout: 28-11

© All rights reserved. Reproduction or issue to third in any form whatever is only permitted with written authorization of ITT Cannon

page 1/1

revision 786 4. Jul 16