# Excellent Integrated System Limited

Stocking Distributor

Click to view price, real time Inventory, Delivery & Lifecycle Information:

ITT Cannon, LLC
CA3102E32-5PB01F0

For any questions, you can email us directly:
sales@integrated-circuit.com

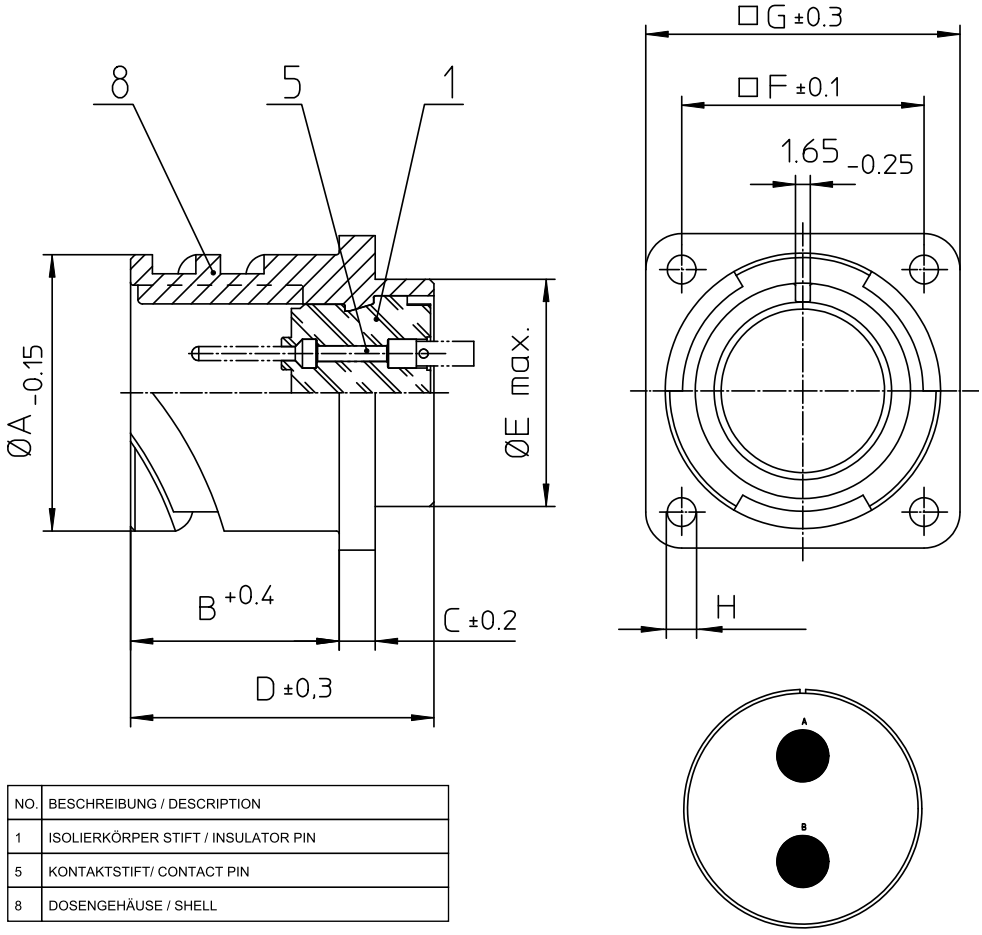


| NO. | MASSE / DIMENSIO |
|---|---|
| A | 53.4 |
| B | 22.2 |
| C | 4 |
| D | 33.8 |
| E | 47.8 |
| F | 44.5 |
| G | 57 |
| H | 4.3 |

| NO. | BESCHREIBUNG / DESCRIPTION |
|---|---|
| 1 | ISOLIERKÖRPER STIFT / INSULATOR PIN |
| 5 | KONTAKTSTIFT/ CONTACT PIN |
| 8 | DOSENGEHÄUSE / SHELL |

Note: Due to an automatic nomenclature system, numbers generated may not be sequential.

Specification and Dimensions subject to chang
Drawings illustrate normal insulator positioning

| Material Specification: | |
|---|---|
| Shell Material: | Aluminium alloy |
| Shell Plating: | Olive drab chromate over cadmium (conductive) |
| Insulator Material: | CR-Elastomere |
| Contact Material: | Copper alloy |
| Contact Plating: | Hard silver |

all dimensions are in mm
Dimensions without tolerance indications are general tolerances in acc. with DIN7168m

drawing for: CUSTOMER

ITT
Engineered for life
ITT CANNON GmbH
D - 71384 Weinstadt/Germany

description: CA3102E32-5P-B-01-F0
Box mounting receptacle

Metric Crimp / Pin / Layout: 32-5

© All rights reserved. Reproduction or issue to third in any form whatever is only permitted with written authorization of ITT Cannon

page 1/1
revision 786 4. Jul 16