# Excellent Integrated System Limited

Stocking Distributor

Click to view price, real time Inventory, Delivery & Lifecycle Information:

ITT Cannon, LLC
CA3106E20-15P

For any questions, you can email us directly:
sales@integrated-circuit.com

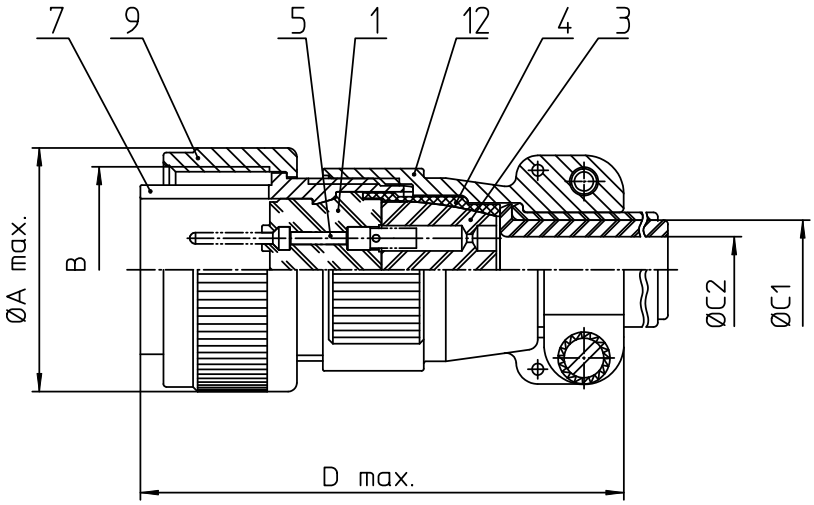


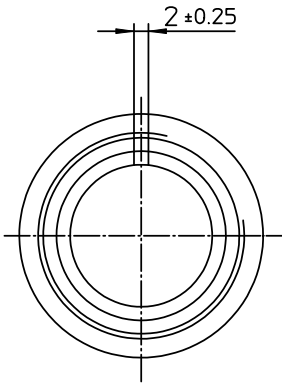


| NO. | MASSE / DIMENSIO |
|---|---|
| A | 37.4 |
| B | 1 1/4-18NEF-2B |
| C1 | 15.9 |
| C2 | - |
| D | 68 |

| NO. | BESCHREIBUNG / DESCRIPTION |
|---|---|
| 1 | ISOLIERKÖRPER STIFT / INSULATOR PIN |
| 3 | DICHTKÖRPER / GROMMET |
| 4 | ENDRING / ENDRING |
| 5 | KONTAKTSTIFT/ CONTACT PIN |
| 7 | ZYLINDERGHÄUSE / BARREL |
| 9 | ÜBERWURFMUTTER / COUPLING NUT |
| 12 | ENDGEHÄUSE / ENDBELL |

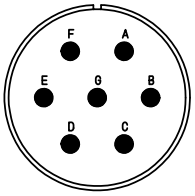


Note: Due to an automatic nomenclature system, numbers generated may not be sequential.

Specification and Dimensions subject to chang
Drawings illustrate normal insulator positioning

| Material Specification: | |
|---|---|
| Shell Material: | Aluminium alloy |
| Shell Plating: | Olive drab chromate coating over cadmium plating |
| Insulator Material: | Neoprene |
| Contact Material: | Copper alloy |
| Contact Plating: | Hard silver |

all dimensions are in mm
Dimensions without tolerance indications are general tolerances in acc. with DIN7168m

drawing for
CUSTOMER

ITT
Engineered for life
ITT CANNON GmbH
D - 71384 Weinstadt/Germany

description CA3106E20-15P
Plug, straight
Endbell with clamp and bushing
Solder Cup / Pin / Layout: 20-15

© All rights reserved, Reproduction or issue to third in any form whatever is only permitted with written authorization of ITT Cannon

page 1/1
revision 377 3. Jul 16