Excellent Integrated System Limited

Stocking Distributor

Click to view price, real time Inventory, Delivery & Lifecycle Information:

FCI
20020621-M021A01LF

For any questions, you can email us directly:
sales@integrated-circuit.com

Distributor of FCI: Excellent Integrated System Limited
Datasheet of 20020621-M021A01LF - TERM BLOCK HDR 2POS VERT 7.62MM
Contact us: sales@integrated-circuit.com Website: www.integrated-circuit.com

Copyright FCI.

FCIconnect.com

PRODUCT NUMBER
20020621-XXXXXXXLF

20020621- □ □ □ □ A 0 □ LF

PITCH
M : 7.62 mm

POLES
02: 2 POLES
03: 3 POLES
04: 4 POLES
.
.
.
16: 16 POLES

HOUSING CODE

LF : DENOTED ROHS COMPATIBLE

1 : STANDARD PRODUCT
W/ BOX PACKING

PROPERTY TABLE	
FCI SERIES NAME	07-762
PITCH (mm)	7.62
VOLTAGE RATING (VAC)	300
CURRENT RATING (A)	32
WITHSTANDING VOLTAGE (kV)	1.6
OPERATING TEMP. (°C)	-40~+115
SOLDERING TEMP. (°C)	250±10 (5 sec.)
POLES AVAILABLE	02~16
SAFETY CERTIFICATE	c us

CODE	COLOR	AVAILABILTY
1	GREEN(RAL 6018/T)	STANDARD
2	BLACK	ON REQUEST ONLY
3	GREY(RAL 7004/P)	ON REQUEST ONLY
4	BLUE(RAL 5015/A)	ON REQUEST ONLY

NOTES:
1. MATERIALS
   1-1 HOUSING: THERMALPLASTIC RESIN, UL 94V-0 RATED.
   1-2 TERMINAL: COPPER ALLOY, TIN PLATED.
2. PRODUCTION SPECIFICATION REFER TO FCI GS-12-625.
3. BOXED PACKAGING.
   DETAILED PRODUCT PACKING SPECIFICATION REFER TO FCI GS-14-1394.
4. FCI, SAFETY CERTIFICATE LOGO AND SERIES NAME TO BE SHOWN ON PRODUCT SURFACE.
5. THE PRODUCTS WHERE THE PART NUMBER END IN "LF" MEET THE EUROPEAN UNION DIRECTIVE AND OTHER COUNTRY REGULATIONS AS DESCRIBED IN GS-22-008.
6. RECOMENDED SOLDERING PROCESS BY WAVE SOLDER.

ltr	ecn no	dr	date
A	T10-0062	WL	050710
B	T10-0155	WL	093010
C	T10-0187	WL	121410
D	T-004860	WL	080411

dr	WENDY CHEN	042610
engr	JASON HSU	042610
chr	GARY HSIEH	042610
appd	JOSEPH HSIA	042610

mat'l. code
surface ASME Y14.5
tolerance ASME Y14.5
tolerances unless otherwise specified
angles X°±1°
linear X.±0.5 / X.X±0.3 / X.XX±0.1
projection
MM [INCH]
scale
product family: TERMINAL BLOCK
title: TERMINAL BLOCK PLUGGABLE SOCKET, POWER, STRAIGHT W/FLANGE
dwg no 20020621
sheet 1 of 2
size A4
type CUSTOMER Drawing

sheet index	revision sheet	D	D
		1	2

form: A4mmXLc

Distributor of FCI: Excellent Integrated System Limited
Datasheet of 20020621-M021A01LF - TERM BLOCK HDR 2POS VERT 7.62MM
Contact us: sales@integrated-circuit.com Website: www.integrated-circuit.com

Copyright FCI.

FCIconnect.com

PRODUCT NUMBER	SERIES NAME	PITCH
20020621-MXXXXXXLF	07-762	7.62 mm

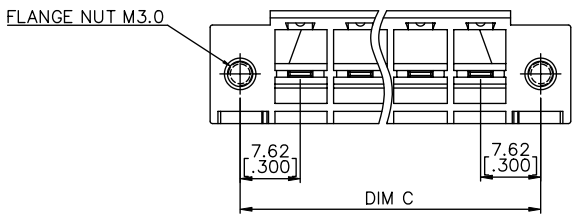

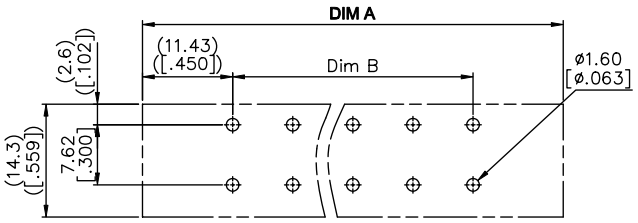

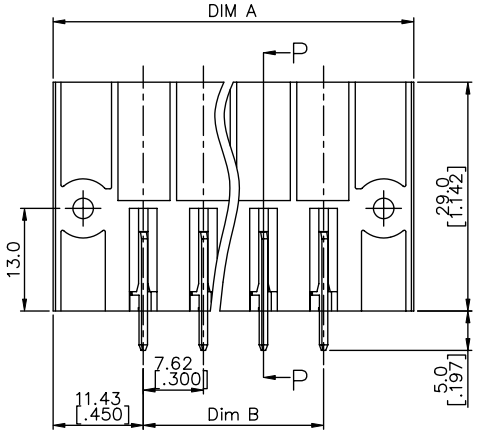

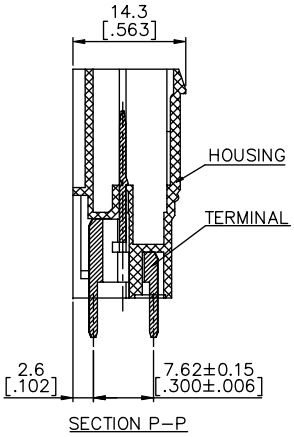

N = Number of poles
Dim A=(N-1)x7.62[.300]+22.86[.900]
Dim B=(N-1)x7.62[.300]
Dim C=(N+1)x7.62[.300]

Poles \ Tol.	Dim A	Dim B	Dim C
2-4p	±0.15[.006]		
5-8p	±0.25[.010]		
9-12p	±0.35[.014]		
13-16p	±0.40[.016]		

mat'l. code	surface ASME Y14.5	tolerance ASME Y14.5	projection
ltr / ecn no / dr / date	tolerances unless otherwise specified		
D	angles	linear X.±0.5 / X.X±0.3 / X.XX±0.1	MM [INCH]
	X°±1°		scale
dr	WENDY CHEN	042610	
engr	JASON HSU	042610	
chr	GARY HSIEH	042610	
appd	JOSEPH HSIA	042610	
sheet index / revision sheet			

product family: TERMINAL BLOCK
title: TERMINAL BLOCK PLUGGABLE SOCKET, POWER, STRAIGHT W/FLANGE
dwg no: 20020621 — sheet 2 of 2 — size A4
type: CUSTOMER Drawing

form: A4mmXLc