Excellent Integrated System Limited

Stocking Distributor

Click to view price, real time Inventory, Delivery & Lifecycle Information:

NXP Semiconductors
MPL015A2

For any questions, you can email us directly:
sales@integrated-circuit.com

Distributor of NXP Semiconductors: Excellent Integrated System Limited
Datasheet of MPL015A2 - IC BAROMETER I2C DGTL MINI 8-LGA
Contact us: sales@integrated-circuit.com Website: www.integrated-circuit.com

Freescale Semiconductor

MPL015A2
Rev 1, 12/2010

Miniature I²C Digital Barometer

The MPL015A2 is an absolute pressure sensor with digital output for low cost applications. A miniature 5 x 3 x 1.2 mm LGA package ideally suits it for portable electronics and space constrained applications. Low current consumptions of 5 μA during Active mode and 0.06 μA during Shutdown (Sleep) mode target battery and other low-power applications. A wide operating temperature range from -40°C to +105°C fits demanding environmental requirements.

MPL015A2 employs a MEMS pressure sensor with a conditioning IC to provide accurate pressure measurement from 50 to 115 kPa. An integrated ADC provides digitized temperature and pressure sensor outputs via an I²C port. Calibration Data is stored in internal ROM. Utilizing raw sensor output, the host microcontroller executes a compensation algorithm to render *Compensated Absolute Pressure*.

The MPL015A2 pressure sensor's small form factor, low power capability, precision, and digital output optimize it for barometric measurement applications.

Features

- Digitized pressure and temperature information together with programmed calibration coefficients for host micro use.
- Factory Calibrated
- 50 kPa to 115 kPa Absolute Pressure
- 1 kPa Accuracy
- 2.375 V to 5.5 V Supply
- Integrated ADC
- I²C Interface
- Monotonic Pressure and Temperature Data Outputs
- Surface Mount RoHS Compliant Package

MPL015A2
50 to 115 kPa

Application Examples

- Barometry (portable and desk-top)
- Altimeters
- Weather Stations
- Hard Disk-Drives (HDD)
- Industrial Equipment
- Health Monitoring
- Air Control Systems

ORDERING INFORMATION

Device Name	Package Options	Case No.	# of Ports			Pressure Type			Digital Interface
			None	Single	Dual	Gauge	Differential	Absolute	
MPL015A2T1	Tape & Reel	2015	•					•	I²C

LGA PACKAGE

MPL015A2
5.0 mm X 3.0 mm X 1.2 mm MAX

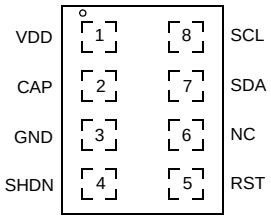

PIN CONNECTIONS

Pin Description

PIN	NAME	FUNCTION
1	VDD	VDD Power Supply Connection.
2	CAP	External Capacitor
3	GND	Ground
4	SHDN	Shutdown (Sleep): Connect to GND to disable the device.
5	RST	Reset: Drive line low to disable I²C communications.
6	NC	NC: No connection.
7	SDA(1)	SDA: Serial data I/O line.
8	SCL(1)	I²C Serial Clock Input.

1. Use 4.7k pull-up resistors for I²C communication.

© Freescale Semiconductor, Inc., 2010. All rights reserved.

Maximum Ratings

Voltage (with respect to GND unless otherwise noted)
V_{DD} ..... -0.3 V to +5.5 V
SCLK, $\overline{CS}$, D_{IN}, D_{OUT} ..... -0.3 V to V_{DD}+0.3 V
Operating Temperature Range ..... -40°C to +105°C
Storage Temperature Range..... -40°C to +125°C
Overpressure ..... 1000 kPa

Operating Characteristics

(V_{DD} = 2.375 V to 5.5 V, T_A = -40°C to +105°C, unless otherwise noted. Typical values are at V+ = 3.3 V, T_A = +25°C.

Ref	Parameters	Symbol	Conditions	Min	Typ	Max	Units
1	Operating Supply Voltage	V_{DD}		2.375	3.3	5.5	V
2	Supply Current	I_{DD}	Shutdown (SHDN = GND) @ 25ºC	—	0.06	1	µA
			Standby	—	3.5	10	µA
			Average – at one measurement per second	—	5	6	µA
Pressure Sensor							
3	Range			50	—	115	kPa
4	Resolution			—	0.15	—	kPa
5	Accuracy		@ 25ºC	—	±1	—	kPa
6	Accuracy Change over Temperature			—	±0.125	—	kPa/ºC
7	Power Supply Rejection		Typical operating circuit at DC	—	0.1	—	kPa/V
			100 mV p-p 217 Hz square wave plus 100 mV pseudo random noise with 10 MHz bandwidth.	—	0.1	—	kPa
8	Conversion Time (*Start Pressure Convert*)	tcp	Time between start convert command and data available in the Pressure register	—	0.6	0.7	ms
Temperature Sensor							
9	Range			-40	—	105	ºC
10	Conversion Time (*Start Temperature Convert*)	tct	Time between start convert command and data available in the Temperature register	—	0.6	0.7	ms
11	Conversion Time (*Start Both Convert*)	tcb	Time between start convert command and data available in the Pressure and Temperature registers	—	0.8	1	ms
12	Resolution		Temperature ADC is 472 counts @ 25ºC	—	-5.35	—	counts/ºC
I^2C I/O Stages: SCL, SDA							
13	SCL Clock Frequency	f_{SCL}		—	—	400	KHz
14	Low Level Input Voltage	VIL		—	—	$0.3V_{DD}$	V
15	High Level Input Voltage	VIH		$0.7V_{DD}$	—	—	V
I^2C Outputs: SDA							
16	Data Setup Time	t_{SU}	Setup time from command receipt to ready to transmit	100	—	—	ns
I^2C Addressing							
MPL015A2 uses 7-bit addressing, does not acknowledge the general call address 0000000. Slave address has been set to 0x60 or 1100000.							

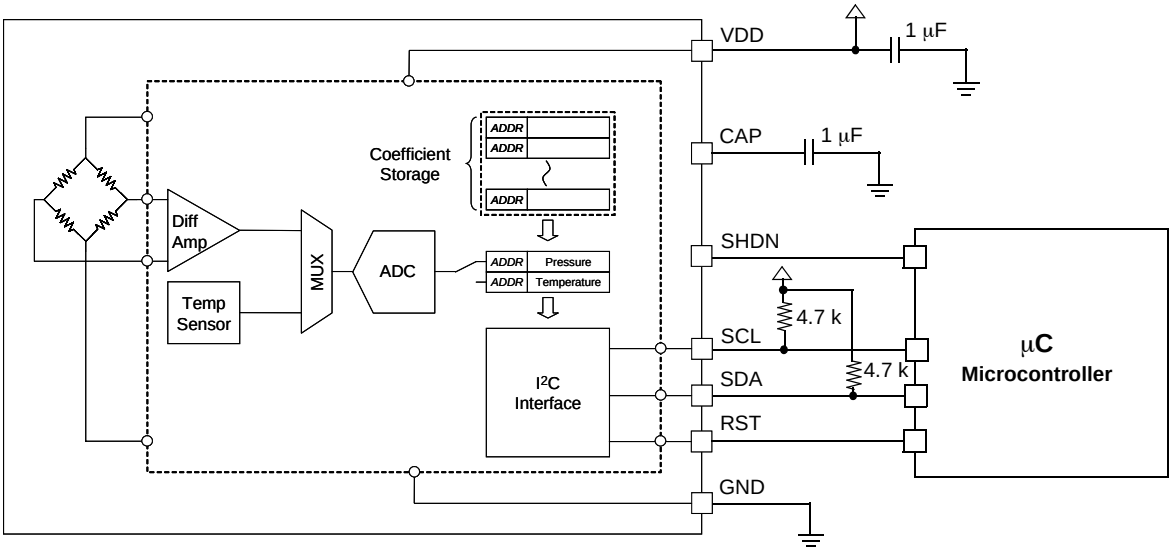

Figure 1. Block Diagram

Compensation

The 10-bit compensated pressure output, Pcomp, is calculated as follows:

Pcomp = a0 + (b1 + Padc + c12*Tadc) * Padc + (b2 + Tadc) * Tadc

Where:

Padc is the 10-bit pressure output of the MPL015A2 ADC,

Tadc is the 10-bit temperature output of the MPL015A2 ADC,

a0 is the pressure offset coefficient,

b1 is the pressure sensitivity coefficient,

c12 is the coefficient for temperature sensitivity coefficient (TCS),

b2 is the 1st order temperature offset coefficient (TCO),

Ideally, Pcomp will produce a value of 0 with an input pressure of 50 kPa and will produce a full-scale value of 1023 with an input pressure of 115 kPa.

Coefficient Bit-Width Specs

The table below specifies the initial coefficient bit-width specs for the compensation algorithm.

10-bit Output: Compensation Coefficient Specs					Total Coeff. Bits
	a0	**b1**	**b2**	**c12**	
Total Bits	16	16	16	14	62
Sign Bits	1	1	1	1	
Integer Bits	12	2	1	0	
Fractional Bits	4	13	14	13	
dec pt zero pad	—	—	—	9	

* Factory reserves the option to make these values = 0.

Example Binary Format Definitions:

1. Sign = 0, Integer Bits = 8, Fractional Bits = 4 : Coeff = S I_7 I_6 I_5 I_4 I_3 I_2 I_1 I_0 . F_3 F_2 F_1 F_0
2. Sign = 1, Integer Bits = 4, Fractional Bits = 7 : Coeff = S I_3 I_2 I_1 I_0 . F_6 F_5 F_4 F_3 F_2 F_1 F_0
3. Sign = 0, Integer Bits = 0, Fractional Bits = 6, dec pt zero pad = 2 : Coeff = S 0 . 0 0 F_5 F_4 F_3 F_2 F_1 F_0
4. Sign = 0, Integer Bits = 0, Fractional Bits = 5, dec pt zero pad = 3 : Coeff = S 0 . 0 0 0 F_4 F_3 F_2 F_1 F_0

NOTE: Negative coefficients (Sign = 1) are coded in 2's complement notation.

Coefficient Address Map

Address	Coefficient
$04	a0 MS Byte
$05	a0 LS Byte
$06	b1 MS Byte
$07	b1 LS Byte
$08	b2 MS Byte
$09	b2 LS Byte
$0A	c12 MS Byte
$0B	c12 LS Byte

For coefficients with less than 16 bits, the lower LSBs are zero. For example, c14 is 14 bits and is stored into 2 bytes as follows:

c14 MS byte = c14[10:3] = [$c14_{b13}$, $c14_{b12}$, $c14_{b11}$, $c14_{b10}$, $c14_{b9}$, $c14_{b8}$, $c14_{b7}$, $c14_{b6}$]

c14 LS byte = c14[2:0] & "00000" = [$c14_{b5}$, $c14_{b4}$, $c14_{b3}$, $c14_{b2}$, $c14_{b1}$, $c14_{b0}$, 0 , 0]

Solder Recommendations

1. Use SAC solder alloy (i.e., Sn-Ag-Cu) with a melting point of about 217°C. It is recommended to use SAC305 (i.e., Sn-3.0 wt.% Ag-0.5 wt.% Cu).
2. Reflow
   - Ramp up rate: 2 to 3 C/s.
   - Preheat flat (soak): 110 to 130s.
   - Reflow peak temperature: 250°C to 260°C (depends on exact SAC alloy composition).
   - Time above 217°C: 40 to 90s (depends on board type, thermal mass of the board/quantities in the reflow).
   - Ramp down: 5 to 6 C/s.
   - Using an inert reflow environment (with O2 level about 5 to 15 ppm).

NOTE: The stress level and signal offset of the device also depends on the board type, board core material, board thickness and metal finishing of the board.

Handling Recommendations

It is recommended to handle the MPL015A2 pressure sensor with a vacuum pick and place tool. Sharp objects utilized to move the MPL015A2 pressure sensor increase the possibility of damage via a foreign object/tool into the small exposed port.

The sensor die is sensitive to light exposure. Direct light exposure through the port hole can lead to varied accuracy of pressure measurement. Avoid such exposure to the port during normal operation.

PACKAGE DIMENSIONS

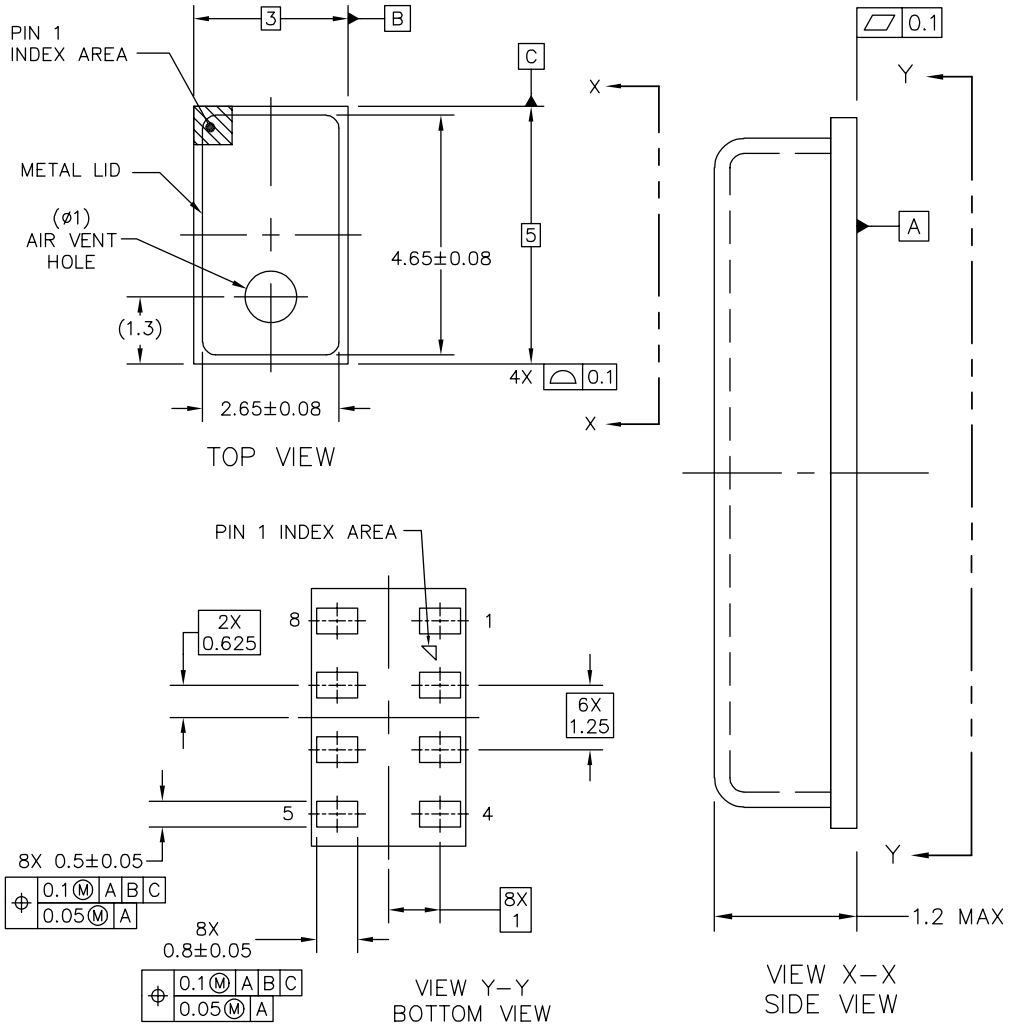

© FREESCALE SEMICONDUCTOR, INC. ALL RIGHTS RESERVED.	MECHANICAL OUTLINE	PRINT VERSION NOT TO SCALE
TITLE: LGA 8 I/O, 3 X 5 X 1.25 PITCH, SENSOR 1.2MAX MM PKG	DOCUMENT NO: 98ASA10829D	REV: A
	CASE NUMBER: 2015–02	10 MAR 2010
	STANDARD: NON–JEDEC	

CASE 2015-02
ISSUE A
LGA PACKAGE

PACKAGE DIMENSIONS

NOTES:

1. ALL DIMENSIONS IN MILLIMETERS.

2. DIMENSIONING AND TOLERANCING PER ASME Y14.5M-1994

3. STYLE:

PIN 1:	VDD	PIN 5:	CS
PIN 2:	CAP	PIN 6:	DOUT
PIN 3:	GND	PIN 7:	DIN
PIN 4:	SHDN	PIN 8:	SCLK

© FREESCALE SEMICONDUCTOR, INC. ALL RIGHTS RESERVED.	**MECHANICAL OUTLINE**	PRINT VERSION NOT TO SCALE	
TITLE: LGA 8 I/O, 3 X 5 X 1.25 PITCH SENSOR 2.0MM PKG	DOCUMENT NO: 98ASA10829D		REV: A
	CASE NUMBER: 2015-02		14 APR 2009
	STANDARD: NON-JEDEC		

CASE 2015-02
ISSUE A
LGA PACKAGE

Distributor of NXP Semiconductors: Excellent Integrated System Limited
Datasheet of MPL015A2 - IC BAROMETER I2C DGTL MINI 8-LGA
Contact us: sales@integrated-circuit.com Website: www.integrated-circuit.com

How to Reach Us:

Home Page:
www.freescale.com

Web Support:
http://www.freescale.com/support

USA/Europe or Locations Not Listed:
Freescale Semiconductor, Inc.
Technical Information Center, EL516
2100 East Elliot Road
Tempe, Arizona 85284
1-800-521-6274 or +1-480-768-2130
www.freescale.com/support

Europe, Middle East, and Africa:
Freescale Halbleiter Deutschland GmbH
Technical Information Center
Schatzbogen 7
81829 Muenchen, Germany
+44 1296 380 456 (English)
+46 8 52200080 (English)
+49 89 92103 559 (German)
+33 1 69 35 48 48 (French)
www.freescale.com/support

Japan:
Freescale Semiconductor Japan Ltd.
Headquarters
ARCO Tower 15F
1-8-1, Shimo-Meguro, Meguro-ku,
Tokyo 153-0064
Japan
0120 191014 or +81 3 5437 9125
support.japan@freescale.com

Asia/Pacific:
Freescale Semiconductor China Ltd.
Exchange Building 23F
No. 118 Jianguo Road
Chaoyang District
Beijing 100022
China
+86 010 5879 8000
support.asia@freescale.com

For Literature Requests Only:
Freescale Semiconductor Literature Distribution Center
1-800-441-2447 or +1-303-675-2140
Fax: +1-303-675-2150
LDCForFreescaleSemiconductor@hibbertgroup.com

Information in this document is provided solely to enable system and software implementers to use Freescale Semiconductor products. There are no express or implied copyright licenses granted hereunder to design or fabricate any integrated circuits or integrated circuits based on the information in this document.

Freescale Semiconductor reserves the right to make changes without further notice to any products herein. Freescale Semiconductor makes no warranty, representation or guarantee regarding the suitability of its products for any particular purpose, nor does Freescale Semiconductor assume any liability arising out of the application or use of any product or circuit, and specifically disclaims any and all liability, including without limitation consequential or incidental damages. “Typical” parameters that may be provided in Freescale Semiconductor data sheets and/or specifications can and do vary in different applications and actual performance may vary over time. All operating parameters, including “Typicals”, must be validated for each customer application by customer’s technical experts. Freescale Semiconductor does not convey any license under its patent rights nor the rights of others. Freescale Semiconductor products are not designed, intended, or authorized for use as components in systems intended for surgical implant into the body, or other applications intended to support or sustain life, or for any other application in which the failure of the Freescale Semiconductor product could create a situation where personal injury or death may occur. Should Buyer purchase or use Freescale Semiconductor products for any such unintended or unauthorized application, Buyer shall indemnify and hold Freescale Semiconductor and its officers, employees, subsidiaries, affiliates, and distributors harmless against all claims, costs, damages, and expenses, and reasonable attorney fees arising out of, directly or indirectly, any claim of personal injury or death associated with such unintended or unauthorized use, even if such claim alleges that Freescale Semiconductor was negligent regarding the design or manufacture of the part.

Freescale and the Freescale logo are trademarks of Freescale Semiconductor, Inc., Reg. U.S. Pat. & Tm. Off. All other product or service names are the property of their respective owners.

© Freescale Semiconductor, Inc. 2010. All rights reserved.

MPL015A2
Rev. 1
12/2010