Excellent Integrated System Limited

Stocking Distributor

Click to view price, real time Inventory, Delivery & Lifecycle Information:

Vishay/Siliconix
DG201HSDJ-E3

For any questions, you can email us directly:
sales@integrated-circuit.com

Distributor of Vishay/Siliconix: Excellent Integrated System Limited
Datasheet of DG201HSDJ-E3 - IC SWITCH QUAD SPST 16DIP
Contact us: sales@integrated-circuit.com Website: www.integrated-circuit.com

DG201HS

Vishay Siliconix

High-Speed Quad SPST CMOS Analog Switch

DESCRIPTION

The DG201HS is an improved monolithic device containing four independent analog switches. It is designed to provide high speed, low error switching of analog signals. Combining low on-resistance (25 Ω) with high speed (t_{ON}: 38 ns), the DG201HS is ideally suited for high speed data acquisition requirements.

To achieve high voltage ratings and superior switching performance, the DG201HS is built on a proprietary high-voltage silicon-gate process. An epitaxial layer prevents latchup.

Each switch conducts equally well in both directions when on, and blocks input voltages to the supply values, when off.

FEATURES

- Fast Switching-t_{ON}: 38 ns
- Low On-Resistance: 25 Ω
- Low Leakage: 100 pA
- Low Charge Injection
- TTL/CMOS Logic Compatible
- Single Supply Compatibility
- High Current Rating: - 30 mA

Pb-free Available

RoHS* COMPLIANT

BENEFITS

- Faster Throughput
- Higher Accuracy
- Reduced Pedestal Error
- Upgrades Existing Designs
- Simple Interfacing
- Replaces HI201HS, ADG201HS
- Space Savings (TSSOP)

APPLICATIONS

- Data Acquisition
- Hi-Rel Systems
- Sample-and-Hold Circuits
- Communication Systems
- Automatic Test Equipment
- Integrator Reset Circuits
- Choppers
- Gain Switching
- Avionics

FUNCTIONAL BLOCK DIAGRAM AND PIN CONFIGURATION

Dual-In-Line, SOIC and TSSOP

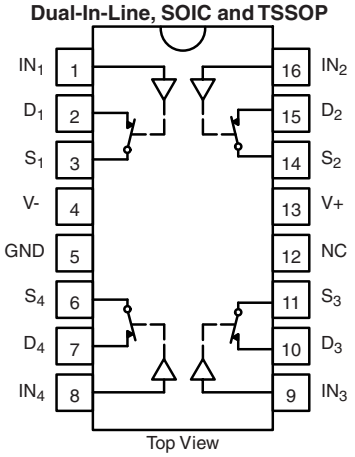

LCC

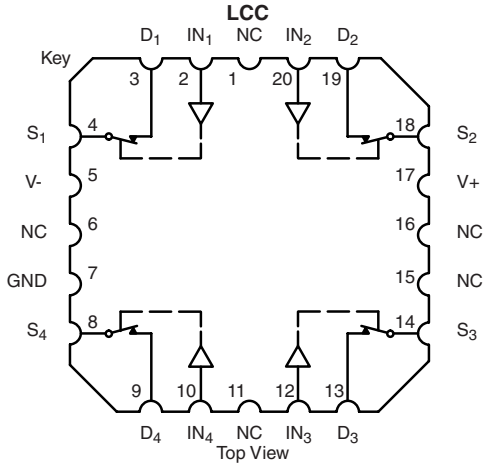

TRUTH TABLE	
Logic	Switch
0	ON
1	OFF

Logic "0" ≤ 0.8 V
Logic "1" ≥ 2.4 V

* Pb containing terminations are not RoHS compliant, exemptions may apply

DG201HS

Vishay Siliconix

ORDERING INFORMATION

Temp Range	Package	Part Number
- 40 to 85 °C	16-Pin Plastic DIP	DG201HSDJ DG201HSDJ-E3
	16-Pin Narrow SOIC	DG201HSDY DG201HSDY-E3 DG201HSDY-T1 DG201HSDY-T1-E3
	16-Pin TSSOP	DG201HSDQ DG201HSDQ-E3 DG201HSDQ-T1 DG201HSDQ-T1-E3

ABSOLUTE MAXIMUM RATINGS

Parameter		Limit	Unit
V+ to V-		44	V
GND to V-		25	
Digital Inputs[a], V_S, V_D		(V-) - 4 to (V+) + 4 or 30 mA, whichever occurs first	
Continuous Current (Any Terminal)		30	mA
Current, S or D (Pulsed at 1 ms, 10 % duty cycle)		100	
Storage Temperature	(A Suffix)	- 65 to 150	°C
	(D Suffix)	- 65 to 125	
Power Dissipation (Package)[b]	16-Pin Plastic DIP[c]	470	mW
	16-Pin CerDIP[d]	900	
	16-Pin Narrow Body SOIC and TSSOP[e]	600	
	LCC-20[d]	900	

Notes:
a. Signals on S_X, D_X, or IN_X exceeding V+ or V- will be clamped by internal diodes. Limit forward diode current to maximum current ratings.
b. All leads welded or soldered to PC board.
c. Derate 6 mW/°C above 75 °C.
d. Derate 12 mW/°C above 75 °C.
e. Derate 7.6 mW/°C above 75 °C.

SCHEMATIC DIAGRAM (TYPICAL CHANNEL)

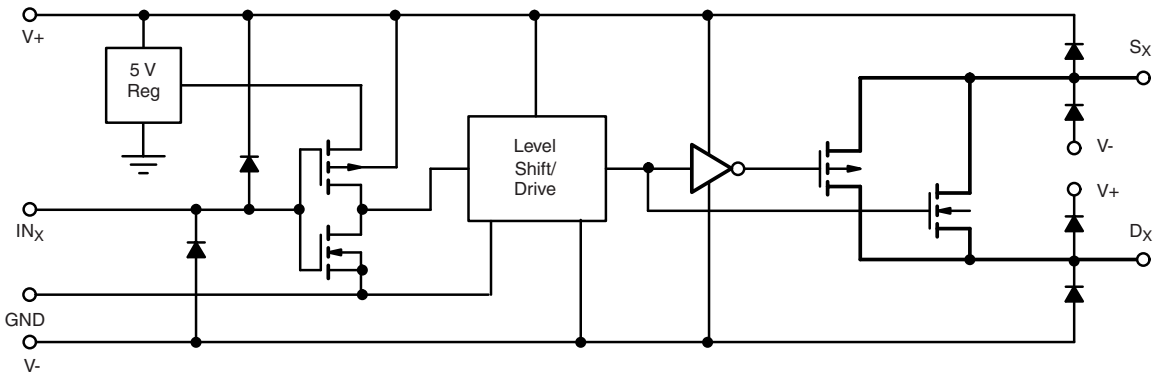

Figure 1.

SPECIFICATIONS[a]									
Parameter	Symbol	Test Conditions Unless Specified V+ = 15 V, V- = - 15 V V_{IN} = 3 V, 0.8 V[f]	Temp[b]	Typ[c]	A Suffix - 55 to 125 °C Min[d]	A Suffix - 55 to 125 °C Max[d]	D Suffix - 40 to 85 °C Min[d]	D Suffix - 40 to 85 °C Max[d]	Unit
Analog Switch									
Analog Signal Range[e]	V_{ANALOG}		Full		V-	V+	V-	V+	V
Drain-Source On-Resistance	$r_{DS(on)}$	I_S = - 10 mA, V_D = ± 8.5 V V+ = 13.5 V, V- = - 13.5 V	Room Full	25		50 75		50 75	Ω
$r_{DS(on)}$ Match			Room	3					%
Switch Off Leakage Current	$I_{S(off)}$	V+ = 16.5 V, V- = - 16.5 V V_D = ± 15.5 V V_S= ± 15.5 V	Room Full	0.1	- 1 - 60	1 60	- 1 - 20	1 20	nA
	$I_{D(off)}$		Room Full	0.1	- 1 - 60	1 60	- 1 - 20	1 20	
Channel On Leakage Current	$I_{D(on)}$	V+ = 16.5 V, V- = - 16.5 V V_S = V_D = ± 15.5 V	Room Full	0.1	- 1 - 60	1 60	- 1 - 20	1 20	
Digital Control									
Input, High Voltage	V_{INH}		Full		2.4		2.4		V
Input, Low Voltage	V_{INL}		Full			0.8		0.8	
Input Capacitance	C_{IN}		Full	5					pF
Input Current	I_{INH} or I_{INL}	V_{IN} under test = 0.8 V, 3 V	Full		- 1	1	- 1	1	µA
Dynamic Characteristics									
Turn-On Time	t_{ON}	R_L = 1 kΩ, C_L = 35 pF V_S = ± 10 V, V_{INH} = 3 V See Figure 2	Room Full	48		60 75		60 75	ns
Turn-Off Time	t_{OFF1}		Room Full	30		50 70		50 70	
	t_{OFF2}		Room	150					
Output Settling Time to 0.1 %	t_s		Room	180					
Charge Injection	Q	C_L = 1 nF, V_S = 0 V V_{gen} = 0 V, R_{gen} = 0 Ω	Room	- 5					pC
Off Isolation	OIRR	R_L = 1 kΩ, C_L = 10 pF f = 100 kHz	Room	85					dB
Crosstalk (Channel-to-Channel)	X_{TALK}	Any Other Channel Switches R_L = 1 kΩ, C_L = 10 pF f = 100 kHz	Room	100					
Source Off Capacitance	$C_{S(off)}$	V_S , V_D = 0 V, f = 1 MHz	Room	8					pF
Drain Off Capacitance	$C_{D(off)}$		Room	8					
Channel On Capacitance	$C_{D(on)}$		Room	30					
Drain-to-Source Capacitance	$C_{DS(off)}$		Room	0.5					
Power Supplies									
Positive Supply Current	I+	V+ = 15 V, V- = - 15 V V_{IN} = 0 or 5 V	Room Full	4.5		10		10	mA
Negative Supply Current	I-		Room Full	3.5	- 6		- 6		
Power Consumption[c]	P_C		Full			240		240	mW

Notes:
a. Refer to PROCESS OPTION FLOWCHART.
b. Room = 25 °C, Full = as determined by the operating temperature suffix.
c. Typical values are for DESIGN AID ONLY, not guaranteed nor subject to production testing.
d. The algebraic convention whereby the most negative value is a minimum and the most positive a maximum, is used in this data sheet.
e. Guaranteed by design, not subject to production test.
f. V_{IN} = input voltage to perform proper function.

DG201HS

Vishay Siliconix

SPECIFICATIONS[a] FOR SINGLE SUPPLY									
Parameter	Symbol	Test Conditions Unless Specified V+ = 10.8 V to 16.5 V, V- = GND = 0 V, V_{IN} = 3 V, 0.8 V[f]	Temp[b]	Typ[c]	A Suffix - 55 to 125 °C Min[d]	A Suffix Max[d]	D Suffix - 40 to 85 °C Min[d]	D Suffix Max[d]	Unit
Analog Switch									
Analog Signal Range[e]	V_{ANALOG}		Full		0	V+	0	V+	V
Drain-Source On-Resistance	$r_{DS(on)}$	I_S = - 10 mA, V_D = 8.5 V V+ = 10.8 V	Room Full	65		90 120		90 120	Ω
Switch Off Leakage Current	$I_{S(off)}$	V+ = 16.5 V V_S= 0.5 V, 10 V V_D = 10 V, 0.5 V	Room Full	0.1	- 1 - 60	1 60	- 1 - 20	1 20	nA
	$I_{D(off)}$		Room Full	0.1	- 1 - 60	1 60	- 1 - 20	1 20	
Channel On Leakage Current	$I_{D(on)} + I_{S(on)}$	V+ = 16.5 V V_D = 0.5 V, 10 V	Room Full	0.1	- 1 - 60	1 60	- 1 - 20	1 20	
Digital Control									
Input, High Voltage	V_{INH}		Full		2.4		2.4		V
Input, Low Voltage	V_{INL}		Full			0.8		0.8	
Input Capacitance	C_{IN}		Full	5					pF
Input Current	I_{INH} or I_{INL}	V+ = 16.5 V V_{IN} under test = 0.8 V, 3 V	Full		- 1	1	- 1	1	µA
Dynamic Characteristics									
Turn-On Time	t_{ON}	R_L = 1 kΩ, C_L = 35 pF V_S = 2 V, V = 10.8 V See Figure 2	Room Full			50 70		50 70	ns
Turn-Off Time	t_{OFF1}		Room Full			50 70		50 70	
	t_{OFF2}		Room	150					
Output Settling Time to 0.1 %	t_s		Room	180					
Charge Injection	Q	C_L = 1 nF, V_S = 0 V V_{gen} = 0 V, R_{gen} = 0 Ω	Room	10					pC
Off Isolation	OIRR	R_L = 1 kΩ, C_L = 10 pF f = 100 kHz	Room	85					dB
Crosstalk (Channel-to-Channel)	X_{TALK}	Any Other Channel Switches R_L = 1 kΩ, C_L = 10 pF f = 100 kHz	Room	100					
Source Off Capacitance	$C_{S(off)}$	f = 1 MHz	Room	10					pF
Drain Off Capacitance	$C_{D(off)}$		Room	10					
Channel On Capacitance	$C_{D(on)}$	V_{ANALOG} = 0 V	Room	30					
Power Supply									
Positive Supply Current	I+	V+ = 15 V, V_{IN} = 0 or 5 V	Full			10		10	mA
Power Consumption[c]	P_C		Full			150		150	mW

Notes:
a. Refer to PROCESS OPTION FLOWCHART.
b. Room = 25 °C, Full = as determined by the operating temperature suffix.
c. Typical values are for DESIGN AID ONLY, not guaranteed nor subject to production testing.
d. The algebraic convention whereby the most negative value is a minimum and the most positive a maximum, is used in this data sheet.
e. Guaranteed by design, not subject to production test.
f. V_{IN} = input voltage to perform proper function.

Stresses beyond those listed under "Absolute Maximum Ratings" may cause permanent damage to the device. These are stress ratings only, and functional operation of the device at these or any other conditions beyond those indicated in the operational sections of the specifications is not implied. Exposure to absolute maximum rating conditions for extended periods may affect device reliability.

TYPICAL CHARACTERISTICS 25 °C, unless otherwise noted

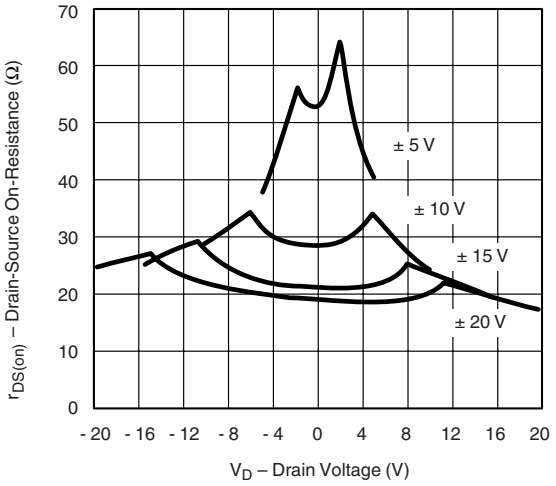

$r_{DS(on)}$ vs. V_D and Power Supply Voltages

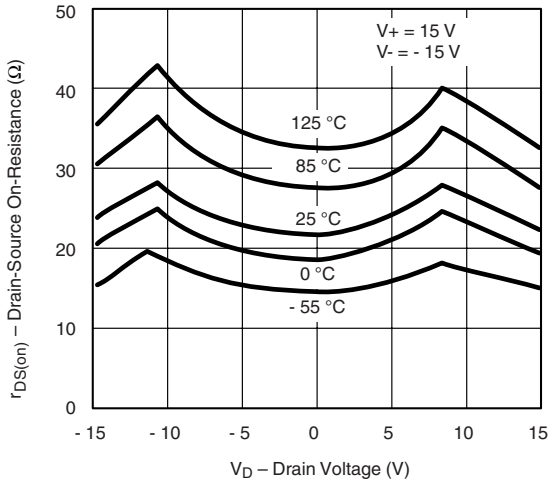

$r_{DS(on)}$ vs. V_D and Temperature

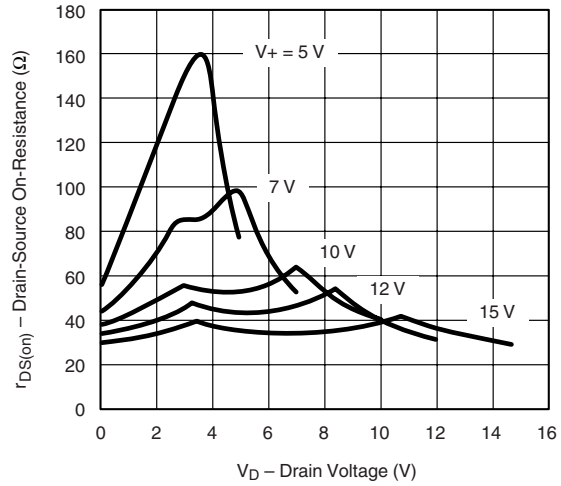

$r_{DS(on)}$ vs. V_D and Single Power Supply Voltages

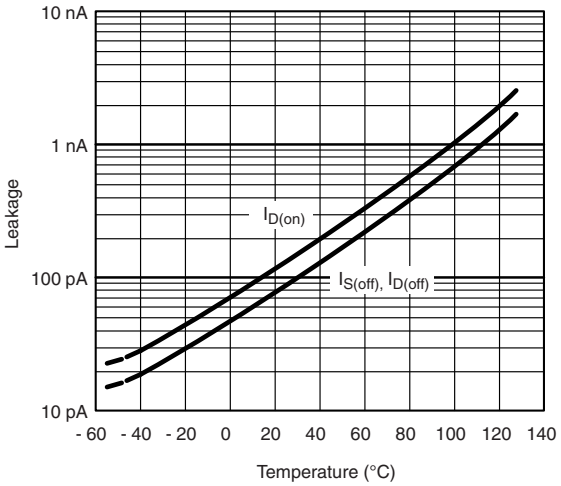

Leakage Currents vs. Temperature

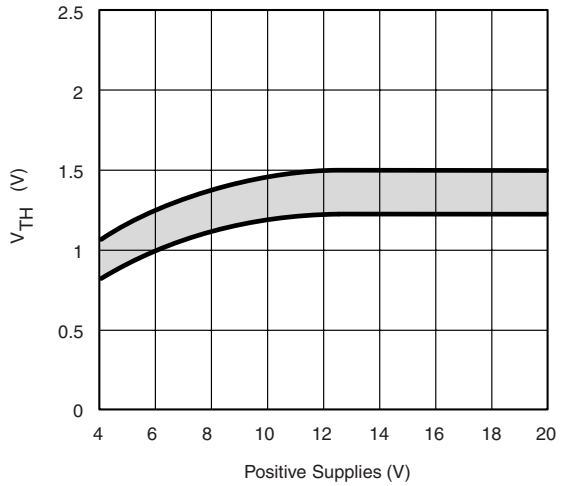

Input Switching Threshold vs. Supply Voltage

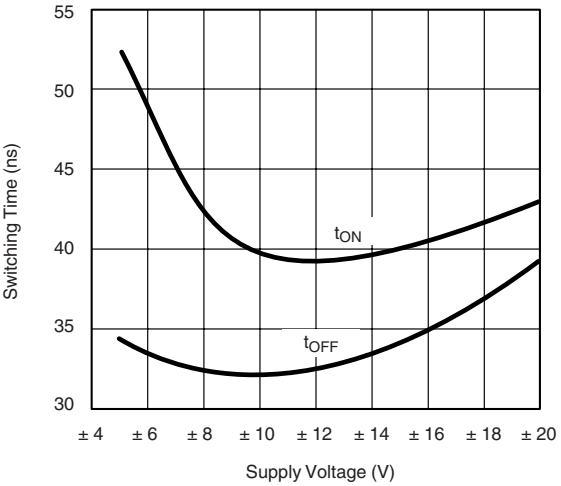

Switching Time vs. Power Supply Voltage

TYPICAL CHARACTERISTICS 25 °C, unless otherwise noted

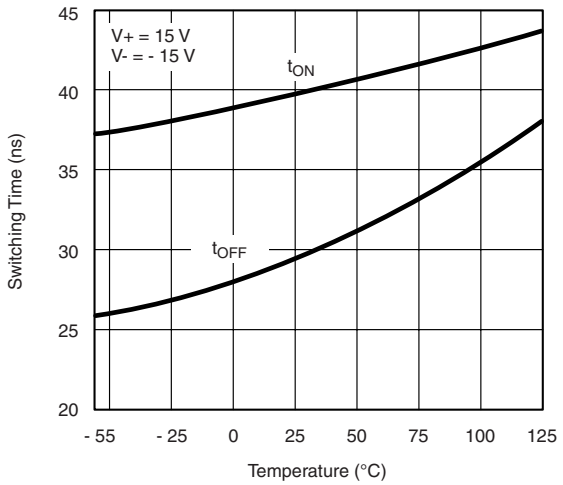

Switching Times vs. Temperature

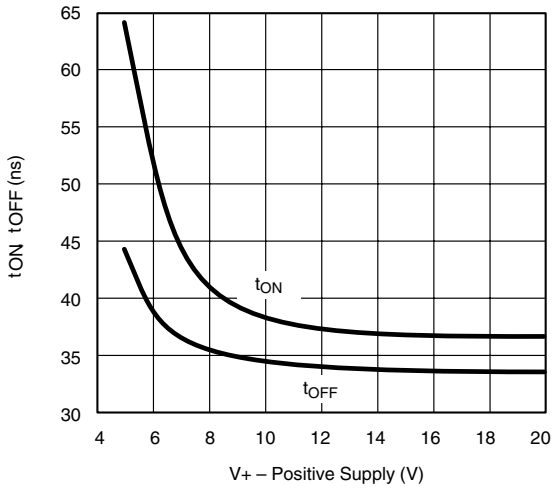

Switching Times vs. Power Supply Voltage

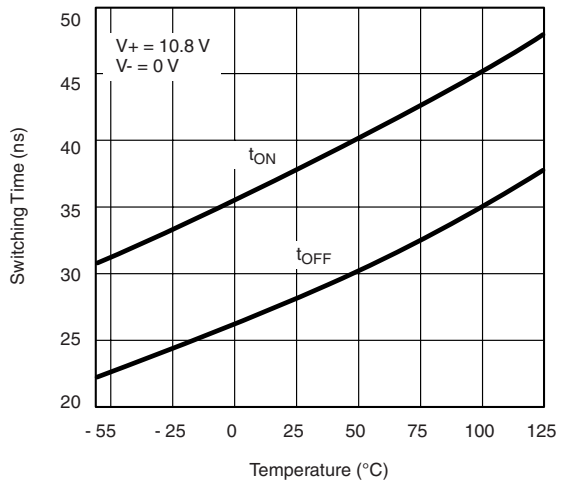

Switching Times vs. Temperature

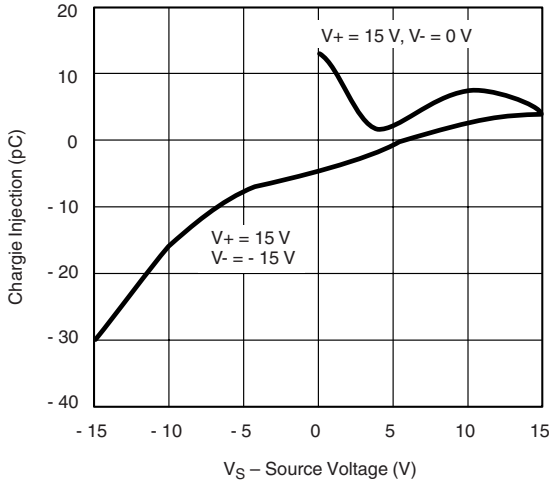

Charge Injection vs. Source Voltage

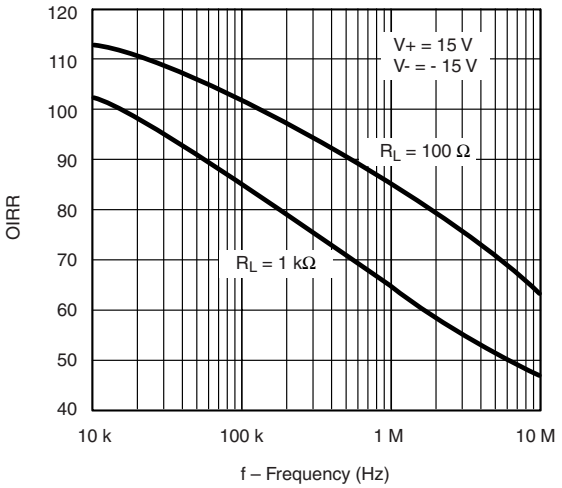

Off Isolation vs. Frequency

TEST CIRCUITS

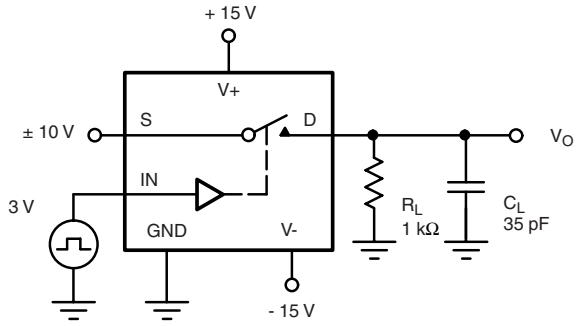

C_L (includes fixture and stray capacitance)

$$V_O = V_S \frac{R_L}{R_L + r_{DS(on)}}$$

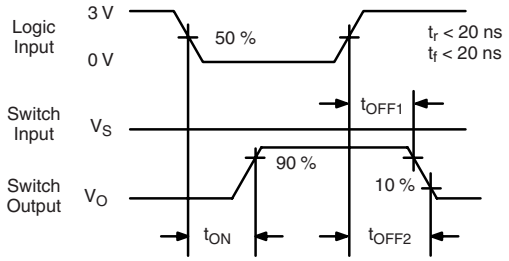

Figure 2. Switching Time

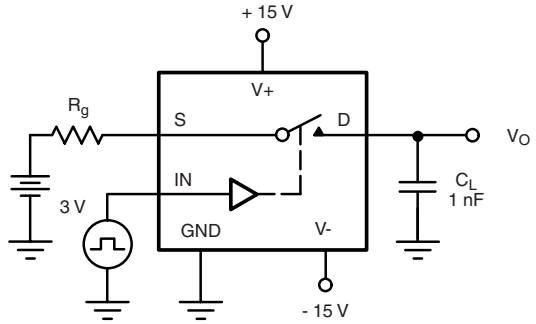

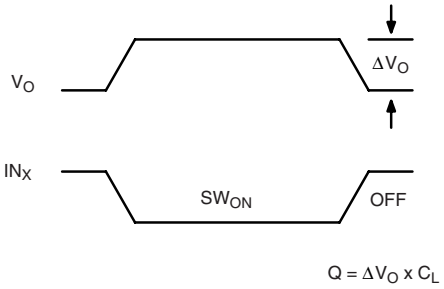

Figure 3. Charge Injection

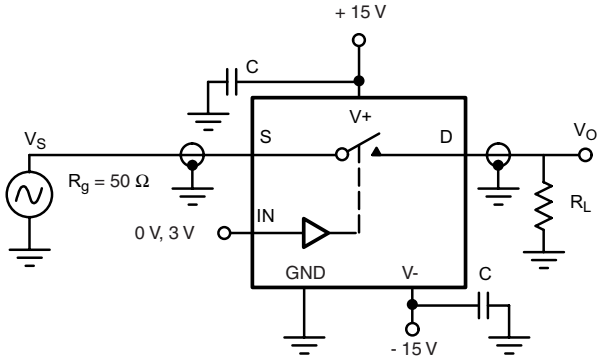

$$\text{Off Isolation} = 20 \log \left| \frac{V_S}{V_O} \right|$$

Figure 4. Off Isolation

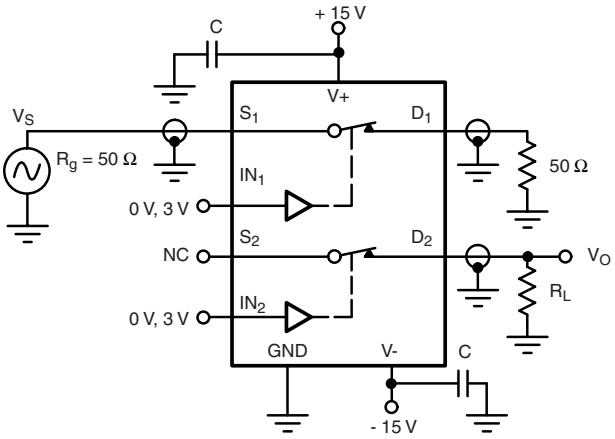

$$X_{TALK}\ \text{Isolation} = 20 \log \left| \frac{V_S}{V_O} \right|$$

C = RF bypass

Figure 5. Crosstalk

APPLICATIONS

A high-speed, low-glitch analog switch such as Vishay Siliconix's DG201HS improves the accuracy and shortens the acquisition and settling times of a sample-and-hold circuit.

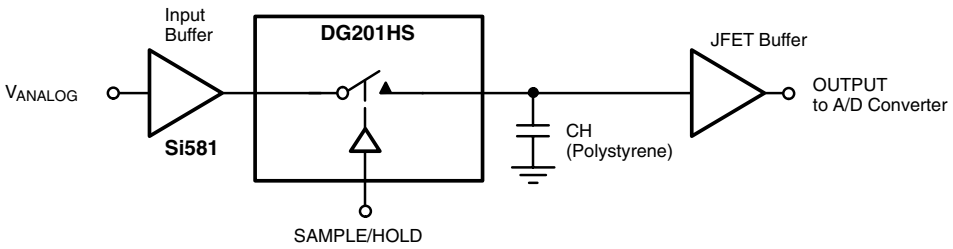

Vishay Siliconix maintains worldwide manufacturing capability. Products may be manufactured at one of several qualified locations. Reliability data for Silicon Technology and Package Reliability represent a composite of all qualified locations. For related documents such as package/tape drawings, part marking, and reliability data, see http://www.vishay.com/ppg?70038.

Legal Disclaimer Notice

Vishay

Disclaimer

All product specifications and data are subject to change without notice.

Vishay Intertechnology, Inc., its affiliates, agents, and employees, and all persons acting on its or their behalf (collectively, “Vishay”), disclaim any and all liability for any errors, inaccuracies or incompleteness contained herein or in any other disclosure relating to any product.

Vishay disclaims any and all liability arising out of the use or application of any product described herein or of any information provided herein to the maximum extent permitted by law. The product specifications do not expand or otherwise modify Vishay’s terms and conditions of purchase, including but not limited to the warranty expressed therein, which apply to these products.

No license, express or implied, by estoppel or otherwise, to any intellectual property rights is granted by this document or by any conduct of Vishay.

The products shown herein are not designed for use in medical, life-saving, or life-sustaining applications unless otherwise expressly indicated. Customers using or selling Vishay products not expressly indicated for use in such applications do so entirely at their own risk and agree to fully indemnify Vishay for any damages arising or resulting from such use or sale. Please contact authorized Vishay personnel to obtain written terms and conditions regarding products designed for such applications.

Product names and markings noted herein may be trademarks of their respective owners.