Excellent Integrated System Limited

Stocking Distributor

Click to view price, real time Inventory, Delivery & Lifecycle Information:

Phoenix Contact
1442667

For any questions, you can email us directly:
sales@integrated-circuit.com

Extract from the online catalog

SAC-5P-M12MR/10,0-PUR P

Order No.: 1442667

http://eshop.phoenixcontact.de/phoenix/treeViewClick.do?UID=1442667

Sensor/Actuator cable, 5-position, PUR halogen-free, Black-gray RAL 7021, Plug, angled M12, A-coded, on Free conductor end, Cable length: 10 m

Commercial data	
GTIN (EAN)	4 046356 535427
Note	Made-to-order
sales group	D112
Pack	1 pcs.
Customs tariff	85444290
Catalog page information	Page 116 (NTK-2010)

Product notes

WEEE/RoHS-compliant since: 09/30/2009

http://www.download.phoenixcontact.com Please note that the data given here has been taken from the online catalog. For comprehensive information and data, please refer to the user documentation. The General Terms and Conditions of Use apply to Internet downloads.

Technical data

General data

Rated current at 40°C	4 A
Rated voltage	60 V
Number of positions	5
Volume resistance	≤ 5 mΩ

SAC-5P-M12MR/10,0-PUR P Order No.: 1442667
http://eshop.phoenixcontact.de/phoenix/treeViewClick.do?UID=1442667

Insulation resistance	≥ 100 MΩ
Length of cable	10 m
Stripping length of the free conductor end	50 mm
Ambient temperature (operation)	-25 °C ... 90 °C (Male connector / female connector)

General characteristics

Standards/regulations	M12 connector IEC 61076-2-101
Coding	A - standard
Surge voltage category	II
Pollution degree	3
Degree of protection	IP65/IP68/IP69K
Insertion/withdrawal cycles	≥ 100
Contact material	CuSn
Contact surface material	Ni/Au
Contact carrier material	TPU GF
Material of grip body	TPU, hardly inflammable, self-extinguishing
Material, knurls	Polyamide
Status display	No

Conductor data

Cable type	PUR halogen-free black
Cable type (abbreviation)	PUR
UL AWM Style	20549
Conductor cross section	0.34 mm²
AWG signal line	22
Conductor structure signal line	42x 0.10 mm
Core diameter including insulation	1.27 mm ±0.02 mm
Thickness, insulation	Approx. 0.7 mm
External cable diameter	5 mm ±0.15 mm
Wire colors	Black, brown, blue, white, green/yellow
External sheath, color	Black-gray RAL 7021
Insulation resistance	≥ 16 GΩ*km (at 20°C)
Conductor resistance	max. 58 Ω/km (at 20°C)
Nominal voltage, conductor	300 V
Test voltage, conductor	3000 V
Outer sheath, material	PUR

SAC-5P-M12MR/10,0-PUR P Order No.: 1442667
http://eshop.phoenixcontact.de/phoenix/treeViewClick.do?UID=1442667

Conductor material	Bare Cu litz wires
Cable weight	35 kg/km
Smallest bending radius, fixed installation	25 mm
Smallest bending radius, movable installation	50 mm
Number of bending cycles	4000000
Bending radius	50 mm
Traversing path	10 m
Traversing rate	3 m/s
Acceleration	10 m/s²
Ambient temperature (operation)	-40 °C ... 80 °C (cable, fixed installation)
	-25 °C ... 80 °C (cable, flexible installation)
Special properties	Flexible cable conduit capable
	Silicone-free
	Free of substances which would hinder coating with paint or varnish
	flexibel
Flame resistance	in accordance with DIN UL-Style 20549
Halogen-free	in accordance with DIN VDE 0472 part 815
Resistance to oil	in accordance with DIN EN 60811-2-1
Other resistance	Highly resistant to acids, alkaline solutions and solvents
	hydrolysis and microbe resistant
	Resistant to salt water

Diagrams/Drawings

Dimensioned drawing

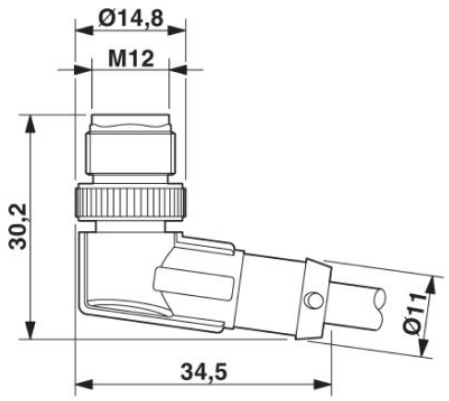

M12 x 1 male connector, angled

SAC-5P-M12MR/10,0-PUR P Order No.: 1442667
http://eshop.phoenixcontact.de/phoenix/treeViewClick.do?UID=1442667

Circuit diagram

Contact assignment of the M12 plug

Schematic diagram

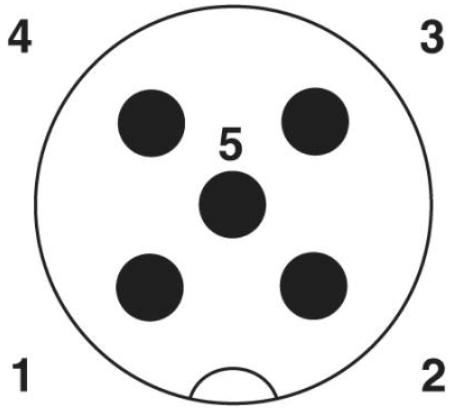

Pin assignment M12 male connector, 5-pos., A-coded, male side

SAC-5P-M12MR/10,0-PUR P Order No.: 1442667
http://eshop.phoenixcontact.de/phoenix/treeViewClick.do?UID=1442667

Address

PHOENIX CONTACT Inc., USA
586 Fulling Mill Road
Middletown, PA 17057,USA
Phone (800) 888-7388
Fax (717) 944-1625
http://www.phoenixcon.com

© 2011 Phoenix Contact
Technical modifications reserved;