Excellent Integrated System Limited

Stocking Distributor

Click to view price, real time Inventory, Delivery & Lifecycle Information:

Cogent Computer Systems
KIT 1724

For any questions, you can email us directly:
sales@integrated-circuit.com

Cogent Computer Systems, Inc.
17 Industrial Drive, Smithfield RI 02917
tel: 401-349-3999, fax: 401-349-3998, web: www.cogcomp.com

"ALWAYS COMPLETE"

CSB1724 - Armada300 System On a Module (SOM)

The CSB1724, designed, developed and manufactured by Cogent Computer Systems, Inc., is a high performance, low-power, Marvell 88F6282 (PJ1 ARMv5TE) based System on a Module (SOM). The CSB1724 provides a small, powerful and flexible engine for Embedded Linux based 10/100/1000 networking and storage applications.

Specifications and Features

- **CPU -** 1.6Ghz 88F6282, Sheeva ARMv5TE Core
- **CACHE -** 16KByte Instruction and Data Caches; 256KByte L2 Cache
- **SDRAM -** 1GByte 16-Bit Wide DDR3-800 Memory
- **FLASH -** On-Board 512MByte SLC NAND
- **PCI EXPRESS -** Two PCIe 1.1 Links (x1)
- **GIGABIT ETHERNET -** Two 10/100/1000 ports via 88E1121R Dual RGMII to Copper PHY
- **SECURITY -** On-Chip Cryptographic and Security Acceleration Engines Support Various Encryption/Decryption Algorithms: AES128; DES/3DES; MD-5 and SHA1 hashing; and others
- **XOR/RAID -** High Speed XOR DMA Engine for RAID Storage Applications
- **SATA -** Dual SATA Gen 2 (1.5Gbit or 3Gbit/sec) Channels
  USB - 480Mbit USB 2.0 Host Port
- **SERIAL I/O -** 2-wire TTL UART, I2C, SPI and I2S Audio Ports
- **SD/MMC -** 4-Bit SD/MMC Port (SDIO Compliant)
- **JTAG -** Standard ARM JTAG (Header located off module)
- **OPERATING VOLTAGE -** Wide Range 8V to 24V Input Rail; On-Board 3.3V (with 3 Amp available to off board devices), 1.8V (SDRAM), 1.0/1.1V (CPU) Power Supplies
- **POWER MANAGEMENT -** On-Board ATXMEGA Microcontroller for Power Sequencing, Voltage Monitoring and Boot Configuration
- **OPERATING TEMPERATURE -** 0C to +70C Standard
- **POWER CONSUMPTION -** 3W typ., 4W Max, <10mw Power Down
- **COGENT MXM SOM COMPLIANT -** Common, Interchangeable Footprint across Multiple CPU Architectures (x86, PowerPC, MIPS and ARM); Low Cost Industry Standard MXM-II Socket
- **ULTRA COMPACT SIZE -** 70mm x 50mm x 5.7mm (using 4.3mm height connector)
- **BOOTLOADER AND OS SUPPORT -** Uboot and Linux 2.6.31+

Introduction and Overview

The Superscalar Sheeva ARMv5TE Architecture Core, Dual PCI Express links, high speed USB, Dual Serial ATA, Dual 10/100/1000 Ethernet and highly efficient on-board regulators all combine to make the CSB1724 the ideal engine for size restricted, high performance, network and storage applications. For the lowest power consumption, the IPM Micro can power the board down completely while remaining on standby power. In this mode the consumption drops to <10milliwatts with IPM bus wakeup events still active. The IPM Micro also controls power sequencing, voltage monitoring, and boot configuration.

The CSB1724 is constructed using state of the art PCB layout and packaging technology such as: 800Mhz DDR2 balanced tree routing; 3GHZ+ high-speed differential signaling; and 8-layer, low EMI, impedance controlled PCB stackup. The CSB1724 gives you access to this technology without the learning curve or the risk. You can integrate the CSB1724 using a simple, low cost 4-layer PCB, in just weeks, not months! We can even do it for you through our custom Rapid Prototyping Program.

© 2012 Cogent Computer Systems, Inc., All rights reserved. Subject to change without notice. All trademarks are property of the respective owners.

Cogent Computer Systems, Inc.
17 Industrial Drive, Smithfield RI 02917
tel: 401-349-3999, fax: 401-349-3998, web: www.cogcomp.com

"ALWAYS COMPLETE"

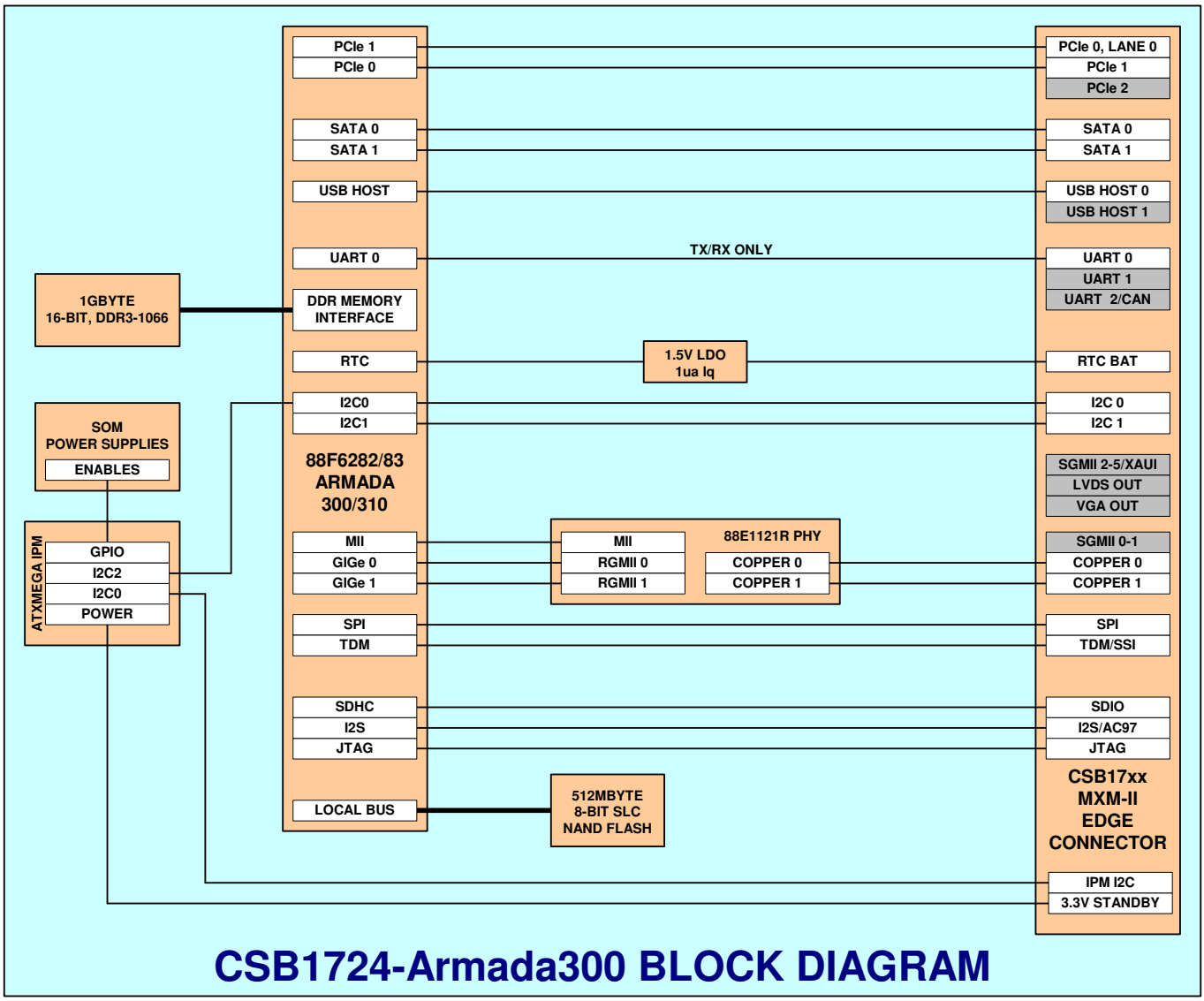

CSB1724-Armada300 BLOCK DIAGRAM

Development Boards and I/O Expansion

The CSB1724 is fully compatible with the CSB1701 Flex-ATX Development Platform. This platform provides a CSB17xx compatible MXM-II Socket; One PCIe x16 Edge Card Socket (x1 mode only with CSB1724); Two PCIe x1 Sockets (second not used by CSB1724); CPU I/O Expansion Headers; USB to RS-232 COM Port; Dual 10/100/1000 Ethernet; Dual SATA Connectors; Four USB Host Connectors; SD/MMC Socket; and 20-pin JTAG Header. The KIT1724-Armada300 consists of the CSB1724 and CSB1701, USB-Serial and Ethernet Cables, with an optional Small Form Factor (SFF) Case and Power Supply. Please contact Cogent for more detailed information.

© 2012 Cogent Computer Systems, Inc., All rights reserved. Subject to change without notice. All trademarks are property of the respective owners.