Excellent Integrated System Limited

Stocking Distributor

Click to view price, real time Inventory, Delivery & Lifecycle Information:

Molex Connector Corporation
0398800906

For any questions, you can email us directly:
sales@integrated-circuit.com

SD-39880-009

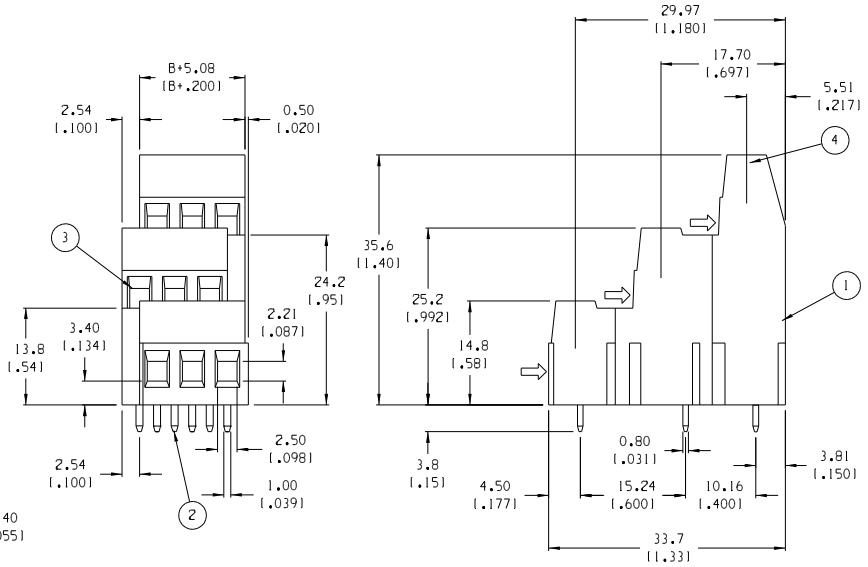

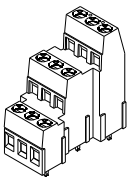

AUX. VIEW
SCALE 1:1

9 CIRCUIT SHOWN

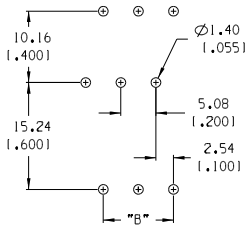

PTH PATTERN

NO. OF CIRCUITS "XX"	DIM. "B"		MATERIAL NO.
06	5.08	[.200]	39880-0906
09	10.16	[.400]	39880-0909
12	15.24	[.600]	39880-0912
15	20.32	[.800]	39880-0915
18	25.40	[1.000]	39880-0918
21	30.48	[1.200]	39880-0921
24	35.56	[1.400]	39880-0924
27	40.64	[1.600]	39880-0927
30	45.72	[1.800]	39880-0930
33	50.80	[2.000]	39880-0933
36	55.88	[2.200]	39880-0936
39	60.96	[2.400]	39880-0939
42	66.04	[2.600]	39880-0942
45	71.12	[2.800]	39880-0945
48	76.20	[3.000]	39880-0948
51	81.28	[3.200]	39880-0951
54	86.36	[3.400]	39880-0954
57	91.44	[3.600]	39880-0957
60	96.52	[3.800]	39880-0960
63	101.60	[4.000]	39880-0963
66	106.68	[4.200]	39880-0966
69	111.76	[4.400]	39880-0969
72	116.84	[4.600]	39880-0972

NOTES:

1. MATERIAL: SEE TABLE
2. FINISHES: SEE TABLE
3. PRODUCT SPECIFICATION: NOT REQUIRED
4. PACKAGING: NOT REQUIRED
5. MATES WITH: NONE
6. "XX" REFERS TO THE QUANTITY OF CIRCUITS.

ITEM	QTY.	DESCRIPTION	MATERIAL	FINISH
4	XX	SCREW, M3	BRONZE	NICKEL
3	XX	CAGE CLAMP	BRASS	NICKEL
2	XX	TERMINAL	PHOSPHOR BRONZE	HOT TIN DIP
1	1	INSULATOR, 3 LEVEL	POLYAMIDE	BLACK

EC NO. ECN# 3963
DRWN: CY 12-23-04
CH'K:
APPR:
DESCRIPTION
REV B

QUALITY SYMBOLS
MAJOR
CRITICAL
SPC

GENERAL TOLERANCES: (UNLESS SPECIFIED)

	mm	INCH
4 PLACES		±.0015
3 PLACES	±.038	±.005
2 PLACES	±.13	±.01
1 PLACE	±.3	
ANGULAR:	±1°	

DRAFT WHERE APPLICABLE MUST REMAIN WITHIN DIMENSIONS

SCALE 2:1
DESIGN UNITS ☐ mm ☒ INCH
THIRD ANGLE PROJECTION
PROJECT NO. N/A
DIMENSIONS: ☐ mm/INCH ☒ INCH/mm ☐ mm ONLY
SHT REV
REVISE ON CAD ONLY

DRAWN BY & DATE R. KEMP 12-4-01
CHECKED BY & DATE P. WALTZ 12-6-01
APPROVED BY & DATE L. ROTHAUS 12-6-01

TITLE: 5.08mm [.200"] EUROSTYLE MID, THREE LEVEL FIXED BLOCK

MOLEX INCORPORATED

CAD FILENAME 8832XX.PRT
MATERIAL NO. SEE CHART
DRAWING NO. B SD-39880-009
SHEET NO. 1 OF 1
SIZE B

THIS DRAWING CONTAINS INFORMATION THAT IS PROPRIETARY TO MOLEX INCORPORATED AND SHOULD NOT BE USED WITHOUT WRITTEN PERMISSION.