# Excellent Integrated System Limited

Stocking Distributor

Click to view price, real time Inventory, Delivery & Lifecycle Information:

Bel Fuse Inc.
TNGMFL1-1-78

For any questions, you can email us directly:
sales@integrated-circuit.com

RED INDICATES ORIGINAL

| TABLE 1 | |
|---|---|
| DASH NO | DESCRIPTION |
| -1 | NO CHAIN |
| -2 | 2.5 BRASS CHAIN |
| -3 | 2.5 NYLON CHAIN |
| -4 | 3.0 BRASS CHAIN |
| -5 | 3.0 NYLON CHAIN |
| -6 | 6.0 BRASS CHAIN |
| -7 | 6.0 NYLON CHAIN |
| -8 | 4.0 BRASS CHAIN |
| -9 | 4.0 NYLON CHAIN |
| -10 | 10.0 BRASS CHAIN |
| -11 | 10.0 NYLON CHAIN |
| -12 | 2.5 SST ROPE |
| -13 | 3.0 SST ROPE |
| -14 | 6.0 SST ROPE |
| -15 | 4.0 SST ROPE |
| -16 | 7.0 SST ROPE |
| -17 | 4.5 SST ROPE |
| -18 | 12.0 SST ROPE |
| -19 | 18.0 SST ROPE |

| TABLE 2 | | | | |
|---|---|---|---|---|
| DASH NO | ØA | ØB | C DIM | D DIM |
| -D2 | .630 | .750 | 1.066 | .450 |
| -D3 | .505 | .625 | .941 | .388 |
| -D4 | .439 | .562 | .878 | .355 |
| -D5 | .380 | .500 | .816 | .325 |
| -D6 | .317 | .437 | .753 | .295 |
| -D7 | .281 | .406 | .722 | .278 |
| -D8 | .610 | .750 | 1.066 | .450 |
| -D9 | .567 | .687 | 1.003 | .419 |
| -D10 | .192 | .312 | .628 | .231 |
| -DD8 | .330 | .450 | .766 | .300 |

DATA CONTAINED IN THIS DOCUMENT IS PROPRIETARY TO TROMPETER ELECTRONICS INC. AND SHALL NOT BE DISCLOSED, COPIED OR USED FOR PROCUMENT OR MANUFACTURE WITHOUT EXPRESS WRITTEN PERMISSION.

| REVISIONS | | | |
|---|---|---|---|
| REV | DESCRIPTIONS | DATE | APPROVED |
| G | REVISED PER ECO # 16834 | 1/13/09 | |

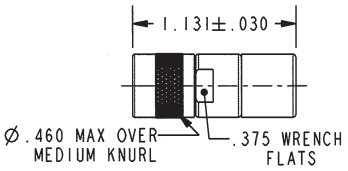


TNGMFL1-1-3 SHOWN
NO CHAIN/ROPE OR MOUNTING LUG

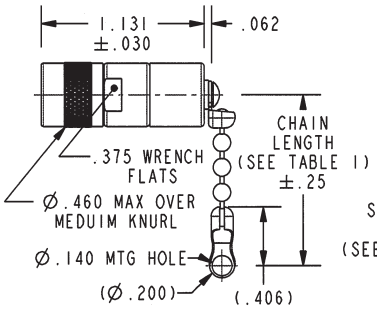


TNGMFL1-2-3 THRU
-11-3 SHOWN
STANDARD CHAIN AND MOUNTING LUG

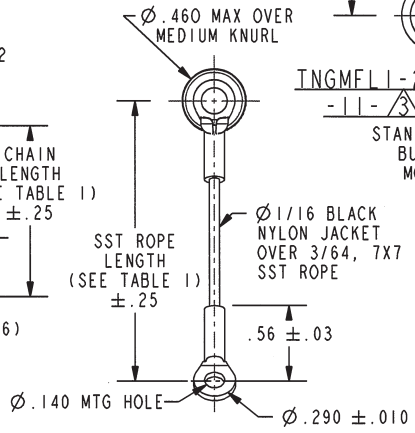


TNGMFL1-12-3 THRU
-19-3 SHOWN
STAINLESS STEEL ROPE AND MOUNTING LUG

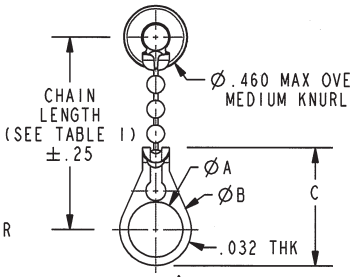


TNGMFL1-2-3-D2 THRU
-11-3-DD8 SHOWN
STANDARD CHAIN AND BULKHEAD JACK MOUNTING LUG

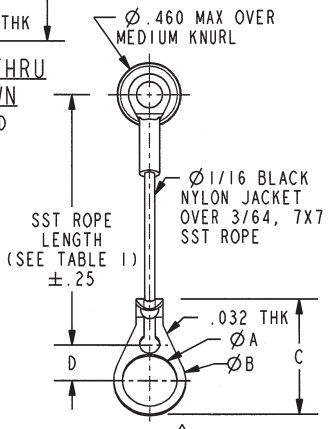


TNGMFL1-12-3-D2 THRU
-19-3-DD8 SHOWN
STAINLESS STEEL ROPE AND BULKHEAD JACK MOUNTING LUG

4. EXAMPLE OF COMPLETE MODEL NUMBER:

TNGMFL1 -2-3 -D2

- TNGMFL1: BASIC MODEL NUMBER
- -2-3: DASH NUMBER (SEE TABLE 1)
- -D2: BULKHEAD JACK MOUNTING LUG (OPTIONAL) SEE TABLE 2

3. RESISTANCE VALUE IN OHMS (1/8 W, 1%), OR
"S" CONTACT SHORTED TO INNER SHIELD (NO RESISTOR)
"O" LOOSELY ASSEMBLED (NO RESISTOR)

2. FINISH: TFS-1A (NICKEL)

1. CONCENTRIC TWINAX/TRIAX TERMINATION TRS SUBMINIATURE SERIES PLUG WITH CHAIN AND SST ROPE OPTIONS

NOTES: UNLESS OTHERWISE SPECIFIED.

SCHEMATICS

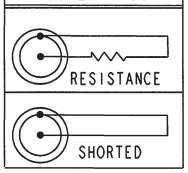


| | | | |
|---|---|---|---|
| INTERPRET DRAWING PER MIL-STD-100. DIMENSIONS ARE IN INCHES AND INCLUDE FINISH THICKNESS UNLESS OTHERWISE SPECIFIED. | TOL: UNLESS SPECIFIED. .XX ± .02 .XXX ± .010 ANGLE ± 1° | TROMPETER RF connectivity a cinch connectivity solutions brand | |
| DRN J.CARPENTER 12-15-08 | MATERIAL: | TITLE: TNGMFL1 | |
| CHK M.J. 1-13-09 | | | |
| QUALITY | FINISH: | | |
| MANUF | | SIZE A / CAGE CODE 14949 | DRAWING NO. 3-0061 / REV. G |
| APPROVED 1-13-09 | | | |
| NEXT ASSY / PRO/E FILE NO. 3-0061 | DO NOT SCALE DWG | SCALE 1/1 / DATE 3-26-81 | SHEET 1C |