Excellent Integrated System Limited

Stocking Distributor

Click to view price, real time Inventory, Delivery & Lifecycle Information:

Vishay/Sprague
M39006/22-0345

For any questions, you can email us directly:
sales@integrated-circuit.com

Wet Tantalum Capacitors, Military Established Reliability, MIL-PRF-39006/22/25 Qualified Styles CLR79, CLR81

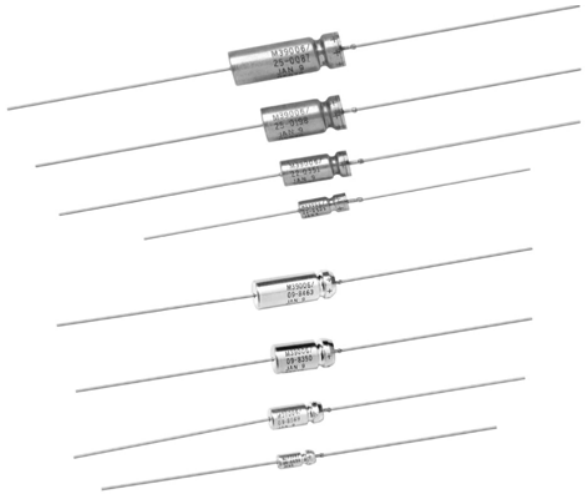

FEATURES

- Hermetically sealed
- Metal cased
- Axial lead
- Tubular

STYLE, MILITARY SPECIFICATION

- CLR79, M39006/22 MIL-PRF-39006/22
- CLR81, M39006/25 MIL-PRF-39006/25

PERFORMANCE CHARACTERISTICS

www.vishay.com/doc?40188

Operating Temperature: -55 °C to +125 °C

Capacitance Range: M39006/22 - 1.7 µF to 1200 µF; M39006/25 - 6.8 µF to 2200 µF

Capacitance Tolerance: ± 5 %, ± 10 %, ± 20 %

Voltage Rating: 6 V_{DC} to 125 V_{DC}

Established Reliability Tantalum Capacitors to Military Specification MIL-PRF-39006: In accordance with the military specification MIL-PRF-39006 all capacitors are marked with the military part number (M39006/xx-xxxx) rather than the older style designation (CLR79, CLR81) and should be ordered as such.

For information on the performance characteristics of these capacitors, please refer to the latest issue of the Military Specification. MIL-PRF-39006 establishes 1000 h failure rate levels of 1 %, 0.1 %, and 0.01 %. When ordering these parts, care must be exercised that the correct part number expressing the appropriate failure level be specified.

Each order for military style capacitors requiring government inspection must state whether inspection is to be at the destination or at the Vishay plant. Orders requiring source inspection cannot be shipped until this has been accomplished.

ORDERING INFORMATION

M39006	/22	-0441	H
BASIC DOCUMENT NUMBER	SLASH SHEET	DASH NUMBER	DESIGNATION OF HIGH VIBRATION (OPTIONAL)
Indicates the basic specification; in this case MIL-PRF-39006	Indicates the specification sheet of the basic military specification	Taken from Standard/ Extended Ratings tables	H, optional, if specified

DIMENSIONS in inches [millimeters]

Style CLR79
Style CLR81

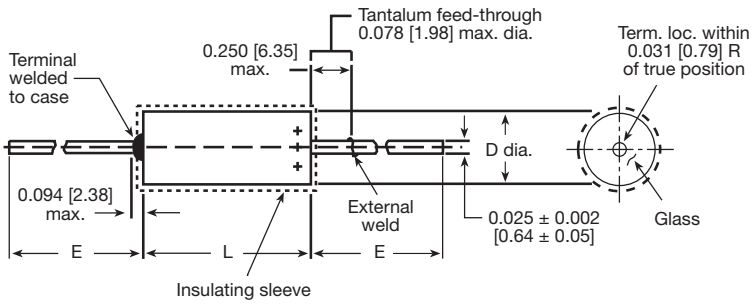

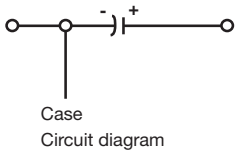

CASE CODE	BARE CASE		WITH INSULATING SLEEVE		E LEAD LENGTH	WEIGHT (oz./g) (Max.)
	D	L	D (Max.)	L (Max.)		
T1	0.188 ± 0.016 [4.78 ± 0.41]	0.453 +0.031/-0.016 [11.51 +0.79/-0.41]	0.219 [5.56]	0.515 [13.08]	1.500 ± 0.250 [38.10 ± 6.35]	0.09 [2.6]
T2	0.281 ± 0.016 [7.14 ± 0.41]	0.641 +0.031/-0.016 [16.28 +0.79/-0.41]	0.312 [7.92]	0.704 [17.88]	2.250 ± 0.250 [57.15 ± 6.35]	0.22 [6.2]
T3	0.375 ± 0.016 [9.53 ± 0.41]	0.766 +0.031/-0.016 [19.46 +0.79/-0.41]	0.406 [10.31]	0.828 [21.03]	2.250 ± 0.250 [57.15 ± 6.35]	0.41 [11.6]
T4	0.375 ± 0.016 [9.53 ± 0.41]	1.062 +0.031/-0.016 [26.97 +0.79/-0.41]	0.406 [10.31]	1.126 [28.60]	2.250 ± 0.250 [57.15 ± 6.35]	0.62 [17.7]

RATINGS AND CASE CODES - M39006/22

µF	6	8	10	15	25	30	50	60	75	100	125
1.7											T1
2.5										T1	
3.5									T1		
3.6											T1
4.0								T1			
4.7										T1	
5.0							T1				
6.8									T1		
8.0						T1					
8.2								T1			
9.0											T2
10					T1		T1				
11										T2	
14											T2
15				T1		T1			T2		
18											T3
20			T1					T2			
22					T1					T2	
25		T1					T2				T3
30	T1									T3	
33				T1					T2		
39								T2			
40						T2			T3		
43										T3	
47			T1				T2				
50					T2			T3			
56		T1							T3		T4
60							T3				
68	T1					T2		T3			
70				T2							
82							T3				

RATINGS AND CASE CODES - M39006/22

µF	6	8	10	15	25	30	50	60	75	100	125
86										T4	
100			T2		T2	T3					
110									T4		
120		T2		T2	T3						
140	T2							T4			
150						T3					
160							T4				
170				T3							
180			T2		T3						
220		T2									
250			T3								
270	T2			T3							
290		T3									
300						T4					
330	T3										
350					T4						
390			T3								
430		T3									
540				T4							
560	T3										
750			T4								
850		T4									
1200	T4										

RATINGS AND CASE CODES - M39006/25

µF	6	8	10	15	25	30	50	60	75	100	125
6.8											T1
10										T1	
22									T1		
27								T1			T2
33							T1				
39										T2	
47											T3
56						T1					
68					T1					T3	
82									T2		T4
100				T1				T2			
120							T2			T4	
150			T1								
180		T1							T3		
220	T1					T2		T3	T4		
270					T2		T3	T4			
330							T4				
390				T2							
470						T3					
560			T2		T3	T4					
680		T2			T4						
820	T2			T3							
1000				T4							
1200			T3								
1500	T3	T3	T4								
1800		T4									
2200	T4										

STANDARD RATINGS / EXTENDED RATINGS: CLR79, M39006/22-XXXX

CAPACITANCE (µF)	CASE CODE	CAP. TOL. (± %)	PART NO. M39006/22- [1] FAILURE RATE LEVEL (%/1000 h)			MAX. DCL (µA) AT		MAX. DF AT +25 °C (%)	MAX. IMP. AT -55 °C (Ω)	MAX. CAPACITANCE CHANGE (%) AT			MAX. [2] RIPPLE CURRENT AT +85 °C 40 kHz (mA)
			M 1.0	P 0.1	R 0.01	+25 °C	+85 °C +125 °C			-55 °C	+85 °C	+125 °C	
6 V_{DC} AT +85 °C; 4 V_{DC} AT +125 °C													
30	T1	20	0001	0221	0441	1.0	2.0	9	100	-40	+10.5	+12	820
30	T1	10	0002	0222	0442	1.0	2.0	9	100	-40	+10.5	+12	820
30	T1	5	0003	0223	0443	1.0	2.0	9	100	-40	+10.5	+12	820
68	T1	20	0004	0224	0444	1.0	2.0	15	60	-40	+14	+16	960
68	T1	10	0005	0225	0445	1.0	2.0	15	60	-40	+14	+16	960
68	T1	5	0006	0226	0446	1.0	2.0	15	60	-40	+14	+16	960
140	T2	20	0007	0227	0447	1.0	3.0	21	40	-40	+14	+16	1200
140	T2	10	0008	0228	0448	1.0	3.0	21	40	-40	+14	+16	1200
140	T2	5	0009	0229	0449	1.0	3.0	21	40	-40	+14	+16	1200
270	T2	20	0010	0230	0450	1.0	6.5	45	25	-44	+17.5	+20	1375
270	T2	10	0011	0231	0451	1.0	6.5	45	25	-44	+17.5	+20	1375
270	T2	5	0012	0232	0452	1.0	6.5	45	25	-44	+17.5	+20	1375
330	T3	20	0013	0233	0453	2.0	7.9	36	20	-44	+14	+16	1800
330	T3	10	0014	0234	0454	2.0	7.9	36	20	-44	+14	+16	1800
330	T3	5	0015	0235	0455	2.0	7.9	36	20	-44	+14	+16	1800
560	T3	20	0016	0236	0456	2.0	13.0	55	25	-64	+17.5	+20	1900
560	T3	10	0017	0237	0457	2.0	13.0	55	25	-64	+17.5	+20	1900
560	T3	5	0018	0238	0458	2.0	13.0	55	25	-64	+17.5	+20	1900
1200	T4	20	0019	0239	0459	3.0	14.0	90	20	-80	+25	+25	2265
1200	T4	10	0020	0240	0460	3.0	14.0	90	20	-80	+25	+25	2265
8 V_{DC} AT +85 °C; 5 V_{DC} AT +125 °C													
25	T1	20	0021	0241	0461	1.0	2.0	7.5	100	-40	+10.5	+12	820
25	T1	10	0022	0242	0462	1.0	2.0	7.5	100	-40	+10.5	+12	820
25	T1	5	0023	0243	0463	1.0	2.0	7.5	100	-40	+10.5	+12	820
56	T1	20	0024	0244	0464	1.0	2.0	14	59	-40	+14	+16	900
56	T1	10	0025	0245	0465	1.0	2.0	14	59	-40	+14	+16	900
56	T1	5	0026	0246	0466	1.0	2.0	14	59	-40	+14	+16	900
120	T2	20	0027	0247	0467	1.0	2.0	20	50	-44	+17.5	+20	1220
120	T2	10	0028	0248	0468	1.0	2.0	20	50	-44	+17.5	+20	1220
120	T2	5	0029	0249	0469	1.0	2.0	20	50	-44	+17.5	+20	1220
220	T2	20	0030	0250	0470	1.0	7.0	37	30	-44	+17.5	+20	1370
220	T2	10	0031	0251	0471	1.0	7.0	37	30	-44	+17.5	+20	1370
220	T2	5	0032	0252	0472	1.0	7.0	37	30	-44	+17.5	+20	1370
290	T3	20	0033	0253	0473	2.0	6.0	34	25	-64	+17.5	+20	1770
290	T3	10	0034	0254	0474	2.0	6.0	34	25	-64	+17.5	+20	1770
290	T3	5	0035	0255	0475	2.0	6.0	34	25	-64	+17.5	+20	1770
430	T3	20	0036	0256	0476	2.0	14.0	46	25	-64	+17.5	+20	1825
430	T3	10	0037	0257	0477	2.0	14.0	46	25	-64	+17.5	+20	1825
430	T3	5	0038	0258	0478	2.0	14.0	46	25	-64	+17.5	+20	1825
850	T4	20	0039	0259	0479	4.0	16.0	60	22	-80	+25	+25	2330
850	T4	10	0040	0260	0480	4.0	16.0	60	22	-80	+25	+25	2330
10 V_{DC} AT +85 °C; 7 V_{DC} AT +125 °C													
20	T1	20	0041	0261	0481	1.0	2.0	6	175	-32	+10.5	+12	820
20	T1	10	0042	0262	0482	1.0	2.0	6	175	-32	+10.5	+12	820
20	T1	5	0043	0263	0483	1.0	2.0	6	175	-32	+10.5	+12	820
47	T1	20	0044	0264	0484	1.0	2.0	13	100	-36	+14	+16	855
47	T1	10	0045	0265	0485	1.0	2.0	13	100	-36	+14	+16	855
47	T1	5	0046	0266	0486	1.0	2.0	13	100	-36	+14	+16	855
100	T2	20	0047	0267	0487	1.0	4.0	15	60	-36	+14	+16	1200
100	T2	10	0048	0268	0488	1.0	4.0	15	60	-36	+14	+16	1200
100	T2	5	0049	0269	0489	1.0	4.0	15	60	-36	+14	+16	1200
180	T2	20	0050	0270	0490	1.0	7.0	30	40	-36	+14	+16	1365

Notes

(1) Dash number will include the letter "H" to indicate the optional vibration and shock requirements (i.e., 51 *g* random vibration, 80 *g* sinusoidal vibration and 500 *g* shock).

(2) For ripple current limits at various temperatures, voltages and frequencies, see Ripple Current table.

STANDARD RATINGS / EXTENDED RATINGS: CLR79, M39006/22-XXXX

CAPACITANCE (µF)	CASE CODE	CAP. TOL. (± %)	PART NO. M39006/22- [1] FAILURE RATE LEVEL (%/1000 h)			MAX. DCL (µA) AT		MAX. DF AT +25 °C (%)	MAX. IMP. AT -55 °C (Ω)	MAX. CAPACITANCE CHANGE (%) AT			MAX. [2] RIPPLE CURRENT AT +85 °C 40 kHz (mA)
			M 1.0	P 0.1	R 0.01	+25 °C	+85 °C +125 °C			-55 °C	+85 °C	+125 °C	
10 V_{DC} AT +85 °C; 7 V_{DC} AT +125 °C													
180	T2	10	0051	0271	0491	1.0	7.0	30	40	-36	+14	+16	1365
180	T2	5	0052	0272	0492	1.0	7.0	30	40	-36	+14	+16	1365
250	T3	20	0053	0273	0493	2.0	10.0	30	30	-40	+14	+16	1720
250	T3	10	0054	0274	0494	2.0	10.0	30	30	-40	+14	+16	1720
250	T3	5	0055	0275	0495	2.0	10.0	30	30	-40	+14	+16	1720
390	T3	20	0056	0276	0496	2.0	16.0	44	25	-64	+17.5	+20	1800
390	T3	10	0057	0277	0497	2.0	16.0	44	25	-64	+17.5	+20	1800
390	T3	5	0058	0278	0498	2.0	16.0	44	25	-64	+17.5	+20	1800
750	T4	20	0059	0279	0499	4.0	16.0	50	23	-80	+25	+25	2360
750	T4	10	0060	0280	0500	4.0	16.0	50	23	-80	+25	+25	2360
15 V_{DC} AT +85 °C; 10 V_{DC} AT +125 °C													
15	T1	20	0061	0281	0501	1.0	2.0	5	155	-24	+10.5	+12	780
15	T1	10	0062	0282	0502	1.0	2.0	5	155	-24	+10.5	+12	780
15	T1	5	0063	0283	0503	1.0	2.0	5	155	-24	+10.5	+12	780
33	T1	20	0064	0284	0504	1.0	2.0	10	90	-28	+14	+16	820
33	T1	10	0065	0285	0505	1.0	2.0	10	90	-28	+14	+16	820
33	T1	5	0066	0286	0506	1.0	2.0	10	90	-28	+14	+16	820
70	T2	20	0067	0287	0507	1.0	4.0	13	75	-28	+14	+16	1150
70	T2	10	0068	0288	0508	1.0	4.0	13	75	-28	+14	+16	1150
70	T2	5	0069	0289	0509	1.0	4.0	13	75	-28	+14	+16	1150
120	T2	20	0070	0290	0510	1.0	7.0	18	50	-28	+17.5	+20	1450
120	T2	10	0071	0291	0511	1.0	7.0	18	50	-28	+17.5	+20	1450
120	T2	5	0072	0292	0512	1.0	7.0	18	50	-28	+17.5	+20	1450
170	T3	20	0073	0293	0513	2.0	10.0	25	35	-32	+14	+16	1480
170	T3	10	0074	0294	0514	2.0	10.0	25	35	-32	+14	+16	1480
170	T3	5	0075	0295	0515	2.0	10.0	25	35	-32	+14	+16	1480
270	T3	20	0076	0296	0516	2.0	16.0	32	30	-56	+17.5	+20	1740
270	T3	10	0077	0297	0517	2.0	16.0	32	30	-56	+17.5	+20	1740
270	T3	5	0078	0298	0518	2.0	16.0	32	30	-56	+17.5	+20	1740
540	T4	20	0079	0299	0519	6.0	24.0	40	23	-80	+25	+25	2330
540	T4	10	0080	0300	0520	6.0	24.0	40	23	-80	+25	+25	2330
25 V_{DC} AT +85 °C; 15 V_{DC} AT +125 °C													
10	T1	20	0081	0301	0521	1.0	2.0	4	220	-16	+8	+9	715
10	T1	10	0082	0302	0522	1.0	2.0	4	220	-16	+8	+9	715
10	T1	5	0083	0303	0523	1.0	2.0	4	220	-16	+8	+9	715
22	T1	20	0084	0304	0524	1.0	2.0	6.6	140	-20	+10.5	+12	825
22	T1	10	0085	0305	0525	1.0	2.0	6.6	140	-20	+10.5	+12	825
22	T1	5	0086	0306	0526	1.0	2.0	6.6	140	-20	+10.5	+12	825
50	T2	20	0087	0307	0527	1.0	2.0	11.0	70	-28	+13	+15	1130
50	T2	10	0088	0308	0528	1.0	2.0	11.0	70	-28	+13	+15	1130
50	T2	5	0089	0309	0529	1.0	2.0	11.0	70	-28	+13	+15	1130
100	T2	20	0090	0310	0530	1.0	10.0	15	50	-28	+13	+15	1435
100	T2	10	0091	0311	0531	1.0	10.0	15	50	-28	+13	+15	1435
100	T2	5	0092	0312	0532	1.0	10.0	15	50	-28	+13	+15	1435
120	T3	20	0093	0313	0533	2.0	6.0	21	38	-32	+13	+15	1450
120	T3	10	0094	0314	0534	2.0	6.0	21	38	-32	+13	+15	1450
120	T3	5	0095	0315	0535	2.0	6.0	21	38	-32	+13	+15	1450
180	T3	20	0096	0316	0536	2.0	18.0	26	32	-48	+13	+15	1525
180	T3	10	0097	0317	0537	2.0	18.0	26	32	-48	+13	+15	1525
180	T3	5	0098	0318	0538	2.0	18.0	26	32	-48	+13	+15	1525
350	T4	20	0099	0319	0539	7.0	28.0	35	24	-70	+25	+25	1970
350	T4	10	0100	0320	0540	7.0	28.0	35	24	-70	+25	+25	1970

Notes

(1) Dash number will include the letter "H" to indicate the optional vibration and shock requirements (i.e., 51 *g* random vibration, 80 *g* sinusoidal vibration and 500 *g* shock).

(2) For ripple current limits at various temperatures, voltages and frequencies, see Ripple Current table.

STANDARD RATINGS / EXTENDED RATINGS: CLR79, M39006/22-XXXX

CAPACITANCE (µF)	CASE CODE	CAP. TOL. (± %)	PART NO. M39006/22- [1] FAILURE RATE LEVEL (%/1000 h)			MAX. DCL (µA) AT		MAX. DF AT +25 °C (%)	MAX. IMP. AT -55 °C (Ω)	MAX. CAPACITANCE CHANGE (%) AT			MAX. [2] RIPPLE CURRENT AT +85 °C 40 kHz (mA)
			M 1.0	P 0.1	R 0.01	+25 °C	+85 °C +125 °C			-55 °C	+85 °C	+125 °C	
30 V_{DC} AT +85 °C; 20 V_{DC} AT +125 °C													
8.0	T1	20	0101	0321	0541	1.0	2.0	4	275	-16	+8	+12	640
8.0	T1	10	0102	0322	0542	1.0	2.0	4	275	-16	+8	+12	640
8.0	T1	5	0103	0323	0543	1.0	2.0	4	275	-16	+8	+12	640
15	T1	20	0104	0324	0544	1.0	2.0	5	175	-20	+10.5	+12	780
15	T1	10	0105	0325	0545	1.0	2.0	5	175	-20	+10.5	+12	780
15	T1	5	0106	0326	0546	1.0	2.0	5	175	-20	+10.5	+12	780
40	T2	20	0107	0327	0547	1.0	5.0	10	65	-24	+10.5	+12	1120
40	T2	10	0108	0328	0548	1.0	5.0	10	65	-24	+10.5	+12	1120
40	T2	5	0109	0329	0549	1.0	5.0	10	65	-24	+10.5	+12	1120
68	T2	20	0110	0330	0550	1.0	8.0	13	60	-24	+13	+15	1285
68	T2	10	0111	0331	0551	1.0	8.0	13	60	-24	+13	+15	1285
68	T2	5	0112	0332	0552	1.0	8.0	13	60	-24	+13	+15	1285
100	T3	20	0113	0333	0553	2.0	12.0	17	40	-28	+10.5	+12	1450
100	T3	10	0114	0334	0554	2.0	12.0	17	40	-28	+10.5	+12	1450
100	T3	5	0115	0335	0555	2.0	12.0	17	40	-28	+10.5	+12	1450
150	T3	20	0116	0336	0556	2.0	18.0	23	35	-48	+13	+15	1525
150	T3	10	0117	0337	0557	2.0	18.0	23	35	-48	+13	+15	1525
150	T3	5	0118	0338	0558	2.0	18.0	23	35	-48	+13	+15	1525
300	T4	20	0119	0339	0559	8.0	32.0	31	25	-60	+25	+25	1950
300	T4	10	0120	0340	0560	8.0	32.0	31	25	-60	+25	+25	1950
50 V_{DC} AT +85 °C; 30 V_{DC} AT +125 °C													
5.0	T1	20	0121	0341	0561	1.0	2.0	3	400	-16	+5	+6	580
5.0	T1	10	0122	0342	0562	1.0	2.0	3	400	-16	+5	+6	580
5.0	T1	5	0123	0343	0563	1.0	2.0	3	400	-16	+5	+6	580
10	T1	20	0124	0344	0564	1.0	2.0	4	250	-24	+8	+9	715
10	T1	10	0125	0345	0565	1.0	2.0	4	250	-24	+8	+9	715
10	T1	5	0126	0346	0566	1.0	2.0	4	250	-24	+8	+9	715
25	T2	20	0127	0347	0567	1.0	5.0	8	95	-20	+10.5	+12	1005
25	T2	10	0128	0348	0568	1.0	5.0	8	95	-20	+10.5	+12	1005
25	T2	5	0129	0349	0569	1.0	5.0	8	95	-20	+10.5	+12	1005
47	T2	20	0130	0350	0570	1.0	9.0	11	70	-28	+13	+15	1155
47	T2	10	0131	0351	0571	1.0	9.0	11	70	-28	+13	+15	1155
47	T2	5	0132	0352	0572	1.0	9.0	11	70	-28	+13	+15	1155
60	T3	20	0133	0353	0573	2.0	12.0	12	45	-16	+10.5	+12	1335
60	T3	10	0134	0354	0574	2.0	12.0	12	45	-16	+10.5	+12	1335
60	T3	5	0135	0355	0575	2.0	12.0	12	45	-16	+10.5	+12	1335
82	T3	20	0136	0356	0576	2.0	16.0	15	45	-32	+13	+15	1400
82	T3	10	0137	0357	0577	2.0	16.0	15	45	-32	+13	+15	1400
82	T3	5	0138	0358	0578	2.0	16.0	15	45	-32	+13	+15	1400
160	T4	20	0139	0359	0579	8.0	32.0	17	27	-50	+25	+25	1900
160	T4	10	0140	0360	0580	8.0	32.0	17	27	-50	+25	+25	1900
60 V_{DC} AT +85 °C; 40 V_{DC} AT +125 °C													
4.0	T1	20	0141	0361	0581	1.0	2.0	2.8	550	-16	+5	+6	525
4.0	T1	10	0142	0362	0582	1.0	2.0	2.8	550	-16	+5	+6	525
4.0	T1	5	0143	0363	0583	1.0	2.0	2.8	550	-16	+5	+6	525
8.2	T1	20	0144	0364	0584	1.0	2.0	4	275	-24	+8	+9	625
8.2	T1	10	0145	0365	0585	1.0	2.0	4	275	-24	+8	+9	625
8.2	T1	5	0146	0366	0586	1.0	2.0	4	275	-24	+8	+9	625
20	T2	20	0147	0367	0587	1.0	5.0	7	105	-16	+10.5	+12	930
20	T2	10	0148	0368	0588	1.0	5.0	7	105	-16	+10.5	+12	930
20	T2	5	0149	0369	0589	1.0	5.0	7	105	-16	+10.5	+12	930
39	T2	20	0150	0370	0590	1.0	9.0	10	90	-28	+10.5	+12	1110

Notes

(1) Dash number will include the letter "H" to indicate the optional vibration and shock requirements (i.e., 51 *g* random vibration, 80 *g* sinusoidal vibration and 500 *g* shock).

(2) For ripple current limits at various temperatures, voltages and frequencies, see Ripple Current table.

STANDARD RATINGS / EXTENDED RATINGS: CLR79, M39006/22-XXXX

CAPACITANCE (µF)	CASE CODE	CAP. TOL. (± %)	PART NO. M39006/22- [1] FAILURE RATE LEVEL (%/1000 h)			MAX. DCL (µA) AT		MAX. DF AT +25 °C (%)	MAX. IMP. AT -55 °C (Ω)	MAX. CAPACITANCE CHANGE (%) AT			MAX. [2] RIPPLE CURRENT AT +85 °C 40 kHz (mA)
			M 1.0	P 0.1	R 0.01	+25 °C	+85 °C +125 °C			-55 °C	+85 °C	+125 °C	
60 V_{DC} AT +85 °C; 40 V_{DC} AT +125 °C													
39	T2	10	0151	0371	0591	1.0	9.0	10	90	-28	+10.5	+12	1110
39	T2	5	0152	0372	0592	1.0	9.0	10	90	-28	+10.5	+12	1110
50	T3	20	0153	0373	0593	2.0	12.0	10	50	-16	+10.5	+12	1330
50	T3	10	0154	0374	0594	2.0	12.0	10	50	-16	+10.5	+12	1330
50	T3	5	0155	0375	0595	2.0	12.0	10	50	-16	+10.5	+12	1330
68	T3	20	0156	0376	0596	2.0	16.0	13	50	-32	+10.5	+12	1365
68	T3	10	0157	0377	0597	2.0	16.0	13	50	-32	+10.5	+12	1365
68	T3	5	0158	0378	0598	2.0	16.0	13	50	-32	+10.5	+12	1365
140	T4	20	0159	0379	0599	8.0	32.0	16	28	-40	+20	+20	1850
140	T4	10	0160	0380	0600	8.0	32.0	16	28	-40	+20	+20	1850
75 V_{DC} AT +85 °C; 50 V_{DC} AT +125 °C													
3.5	T1	20	0161	0381	0601	1.0	2.0	2.5	650	-16	+5	+6	525
3.5	T1	10	0162	0382	0602	1.0	2.0	2.5	650	-16	+5	+6	525
3.5	T1	5	0163	0383	0603	1.0	2.0	2.5	650	-16	+5	+6	525
6.8	T1	20	0164	0384	0604	1.0	2.0	3.5	300	-20	+8	+9	610
6.8	T1	10	0165	0385	0605	1.0	2.0	3.5	300	-20	+8	+9	610
6.8	T1	5	0166	0386	0606	1.0	2.0	3.5	300	-20	+8	+9	610
15	T2	20	0167	0387	0607	1.0	5.0	6	150	-16	+8	+9	890
15	T2	10	0168	0388	0608	1.0	5.0	6	150	-16	+8	+9	890
15	T2	5	0169	0389	0609	1.0	5.0	6	150	-16	+8	+9	890
33	T2	20	0170	0390	0610	1.0	10.0	10	90	-24	+10.5	+15	1000
33	T2	10	0171	0391	0611	1.0	10.0	10	90	-24	+10.5	+15	1000
33	T2	5	0172	0392	0612	1.0	10.0	10	90	-24	+10.5	+15	1000
40	T3	20	0173	0393	0613	2.0	12.0	9	60	-16	+10.5	+12	1250
40	T3	10	0174	0394	0614	2.0	12.0	9	60	-16	+10.5	+12	1250
40	T3	5	0175	0395	0615	2.0	12.0	9	60	-16	+10.5	+12	1250
56	T3	20	0176	0396	0616	2.0	17.0	11	60	-28	+10.5	+15	1335
56	T3	10	0177	0397	0617	2.0	17.0	11	60	-28	+10.5	+15	1335
56	T3	5	0178	0398	0618	2.0	17.0	11	60	-28	+10.5	+15	1335
110	T4	20	0179	0399	0619	9.0	36.0	12	29	-35	+20	+20	1850
110	T4	10	0180	0400	0620	9.0	36.0	12	29	-35	+20	+20	1850
100 V_{DC} AT +85 °C; 65 V_{DC} AT +125 °C													
2.5	T1	20	0181	0401	0621	1.0	2.0	2	950	-16	+7	+8	505
2.5	T1	10	0182	0402	0622	1.0	2.0	2	950	-16	+7	+8	505
2.5	T1	5	0183	0403	0623	1.0	2.0	2	950	-16	+7	+8	505
4.7	T1	20	0184	0404	0624	1.0	2.0	3	500	-16	+7	+8	565
4.7	T1	10	0185	0405	0625	1.0	2.0	3	500	-16	+7	+8	565
4.7	T1	5	0186	0406	0626	1.0	2.0	3	500	-16	+7	+8	565
11	T2	20	0187	0407	0627	1.0	4.0	5	200	-16	+8	+8	835
11	T2	10	0188	0408	0628	1.0	4.0	5	200	-16	+8	+8	835
11	T2	5	0189	0409	0629	1.0	4.0	5	200	-16	+8	+8	835
22	T2	20	0190	0410	0630	1.0	9.0	7.5	100	-16	+8	+8	965
22	T2	10	0191	0411	0631	1.0	9.0	7.5	100	-16	+8	+8	965
22	T2	5	0192	0412	0632	1.0	9.0	7.5	100	-16	+8	+8	965
30	T3	20	0193	0413	0633	2.0	12.0	7	80	-16	+8	+8	1240
30	T3	10	0194	0414	0634	2.0	12.0	7	80	-16	+8	+8	1240
30	T3	5	0195	0415	0635	2.0	12.0	7	80	-16	+8	+8	1240
43	T3	20	0196	0416	0636	2.0	17.0	8.5	70	-20	+8	+8	1335
43	T3	10	0197	0417	0637	2.0	17.0	8.5	70	-20	+8	+8	1335
43	T3	5	0198	0418	0638	2.0	17.0	8.5	70	-20	+8	+8	1335
86	T4	20	0199	0419	0639	9.0	36.0	10	30	-25	+15	+15	1800
86	T4	10	0200	0420	0640	9.0	36.0	10	30	-25	+15	+15	1800

Notes

(1) Dash number will include the letter "H" to indicate the optional vibration and shock requirements (i.e., 51 *g* random vibration, 80 *g* sinusoidal vibration and 500 *g* shock).

(2) For ripple current limits at various temperatures, voltages and frequencies, see Ripple Current table.

STANDARD RATINGS / EXTENDED RATINGS: CLR79, M39006/22-XXXX

CAPACITANCE (µF)	CASE CODE	CAP. TOL. (± %)	PART NO. M39006/22- [1] FAILURE RATE LEVEL (%/1000 h)			MAX. DCL (µA) AT		MAX. DF AT +25 °C (%)	MAX. IMP. AT -55 °C (Ω)	MAX. CAPACITANCE CHANGE (%) AT			MAX. [2] RIPPLE CURRENT AT +85 °C 40 kHz (mA)
			M 1.0	P 0.1	R 0.01	+25 °C	+85 °C +125 °C			-55 °C	+85 °C	+125 °C	
125 V_{DC} AT +85 °C; 85 V_{DC} AT +125 °C													
1.7	T1	20	0201	0421	0641	1.0	2.0	2	1250	-16	+7	+8	415
1.7	T1	10	0202	0422	0642	1.0	2.0	2	1250	-16	+7	+8	415
1.7	T1	5	0203	0423	0643	1.0	2.0	2	1250	-16	+7	+8	415
3.6	T1	20	0204	0424	0644	1.0	2.0	2.7	600	-16	+7	+8	520
3.6	T1	10	0205	0425	0645	1.0	2.0	2.7	600	-16	+7	+8	520
3.6	T1	5	0206	0426	0646	1.0	2.0	2.7	600	-16	+7	+8	520
9.0	T2	20	0207	0427	0647	1.0	5.0	5	240	-16	+7	+8	755
9.0	T2	10	0208	0428	0648	1.0	5.0	5	240	-16	+7	+8	755
9.0	T2	5	0209	0429	0649	1.0	5.0	5	240	-16	+7	+8	755
14	T2	20	0210	0430	0650	1.0	7.0	6	167	-16	+7	+8	860
14	T2	10	0211	0431	0651	1.0	7.0	6	167	-16	+7	+8	860
14	T2	5	0212	0432	0652	1.0	7.0	6	167	-16	+7	+8	860
18	T3	20	0213	0433	0653	2.0	9.0	5	129	-16	+7	+8	1130
18	T3	10	0214	0434	0654	2.0	9.0	5	129	-16	+7	+8	1130
18	T3	5	0215	0435	0655	2.0	9.0	5	129	-16	+7	+8	1130
25	T3	20	0216	0436	0656	2.0	13.0	6	93	-16	+7	+8	1200
25	T3	10	0217	0437	0657	2.0	13.0	6	93	-16	+7	+8	1200
25	T3	5	0218	0438	0658	2.0	13.0	6	93	-16	+7	+8	1200
56	T4	20	0219	0439	0659	10.0	40.0	6.5	32	-25	+15	+15	1800
56	T4	10	0220	0440	0660	10.0	40.0	6.5	32	-25	+15	+15	1800

Notes

(1) Dash number will include the letter "H" to indicate the optional vibration and shock requirements (i.e., 51 *g* random vibration, 80 *g* sinusoidal vibration and 500 *g* shock).

(2) For ripple current limits at various temperatures, voltages and frequencies, see Ripple Current table.

STANDARD RATINGS / EXTENDED RATINGS: CLR81, M39006/25-XXXX

CAPACITANCE (µF)	CASE CODE	CAP. TOL. (± %)	PART NO. M39006/25- [1] FAILURE RATE LEVEL (%/1000 h)			MAX. DCL (µA) AT		MAX. DF AT +25 °C (%)	MAX. IMP. AT -55 °C (Ω)	MAX. CAPACITANCE CHANGE (%) AT			MAX. [1] RIPPLE CURRENT AT +85 °C 40 kHz (mA)
			M 1.0	P 0.1	R 0.01	+25 °C	+85 °C +125 °C			-55 °C	+85 °C	+125 °C	
6 V_{DC} AT +85 °C; 4 V_{DC} AT +125 °C													
220	T1	20	0001	0089	0177	2.0	9.0	50	36	-64	+13	+16	1000
220	T1	10	0002	0090	0178	2.0	9.0	50	36	-64	+13	+16	1000
820	T2	20	0003	0091	0179	3.0	14.0	155	18	-88	+16	+20	1500
820	T2	10	0004	0092	0180	3.0	14.0	155	18	-88	+16	+20	1500
1500	T3	20	0005	0093	0181	5.0	20.0	172	18	-90	+20	+25	1900
1500	T3	10	0006	0094	0182	5.0	20.0	172	18	-90	+20	+25	1900
2200	T4	20	0007	0095	0183	6.0	24.0	170	13	-90	+25	+30	2300
2200	T4	10	0008	0096	0184	6.0	24.0	170	13	-90	+25	+30	2300
8 V_{DC} AT +85 °C; 5 V_{DC} AT +125 °C													
180	T1	20	0009	0097	0185	2.0	9.0	41	45	-60	+13	+16	1000
180	T1	10	0010	0098	0186	2.0	9.0	41	45	-60	+13	+16	1000
680	T2	20	0011	0099	0187	3.0	14.0	130	22	-83	+16	+20	1500
680	T2	10	0012	0100	0188	3.0	14.0	130	22	-83	+16	+20	1500
1500	T3	20	0013	0101	0189	5.0	20.0	170	18	-90	+20	+25	1900
1500	T3	10	0014	0102	0190	5.0	20.0	170	18	-90	+20	+25	1900
1800	T4	20	0015	0103	0191	7.0	25.0	138	14	-90	+25	+30	2300
1800	T4	10	0016	0104	0192	7.0	25.0	138	14	-90	+25	+30	2300

Notes

(1) Dash number will include the letter "H" to indicate the optional vibration and shock requirements (i.e., 51 *g* random vibration, 80 *g* sinusoidal vibration and 500 *g* shock).

(2) For ripple current limits at various temperatures, voltages and frequencies, see Ripple Current table.

STANDARD RATINGS / EXTENDED RATINGS: CLR81, M39006/25-XXXX

CAPACITANCE (µF)	CASE CODE	CAP. TOL. (± %)	PART NO. M39006/25- (1) FAILURE RATE LEVEL (%/1000 h)			MAX. DCL (µA) AT		MAX. DF AT +25 °C (%)	MAX. IMP. AT -55 °C (Ω)	MAX. CAPACITANCE CHANGE (%) AT			MAX. (1) RIPPLE CURRENT AT +85 °C 40 kHz (mA)
			M 1.0	P 0.1	R 0.01	+25 °C	+85 °C +125 °C			-55 °C	+85 °C	+125 °C	
10 V_{DC} AT +85 °C; 7 V_{DC} AT +125 °C													
150	T1	20	0017	0105	0193	2.0	9.0	34	54	-55	+13	+16	900
150	T1	10	0018	0106	0194	2.0	9.0	34	54	-55	+13	+16	900
560	T2	20	0019	0107	0195	3.0	16.0	106	27	-77	+16	+20	1450
560	T2	10	0020	0108	0196	3.0	16.0	106	27	-77	+16	+20	1450
1200	T3	20	0021	0109	0197	5.0	20.0	137	18	-88	+20	+25	1850
1200	T3	10	0022	0110	0198	5.0	20.0	137	18	-88	+20	+25	1850
1500	T4	20	0023	0111	0199	7.0	25.0	114	15	-88	+25	+30	2300
1500	T4	10	0024	0112	0200	7.0	25.0	114	15	-88	+25	+30	2300
15 V_{DC} AT +85 °C; 10 V_{DC} AT +125 °C													
100	T1	20	0025	0113	0201	2.0	9.0	30	72	-44	+13	+16	900
100	T1	10	0026	0114	0202	2.0	9.0	30	72	-44	+13	+16	900
390	T2	20	0027	0115	0203	3.0	16.0	74	31	-66	+16	+20	1450
390	T2	10	0028	0116	0204	3.0	16.0	74	31	-66	+16	+20	1450
820	T3	20	0029	0117	0205	6.0	24.0	111	22	-77	+20	+25	1800
820	T3	10	0030	0118	0206	6.0	24.0	111	22	-77	+20	+25	1800
1000	T4	20	0031	0119	0207	8.0	32.0	92	17	-77	+25	+30	2300
1000	T4	10	0032	0120	0208	8.0	32.0	92	17	-77	+25	+30	2300
25 V_{DC} AT +85 °C; 15 V_{DC} AT +125 °C													
68	T1	20	0033	0121	0209	2.0	9.0	22	90	-40	+12	+15	850
68	T1	10	0034	0122	0210	2.0	9.0	22	90	-40	+12	+15	850
270	T2	20	0035	0123	0211	3.0	16.0	55	33	-62	+13	+16	1400
270	T2	10	0036	0124	0212	3.0	16.0	55	33	-62	+13	+16	1400
560	T3	20	0037	0125	0213	7.0	28.0	76	24	-72	+20	+25	1750
560	T3	10	0038	0126	0214	7.0	28.0	76	24	-72	+20	+25	1750
680	T4	20	0039	0127	0215	8.0	32.0	63	19	-72	+25	+30	2100
680	T4	10	0040	0128	0216	8.0	32.0	63	19	-72	+25	+30	2100
30 V_{DC} AT +85 °C; 20 V_{DC} AT +125 °C													
56	T1	20	0041	0129	0217	2.0	9.0	22	100	-38	+12	+15	800
56	T1	10	0042	0130	0218	2.0	9.0	22	100	-38	+12	+15	800
220	T2	20	0043	0131	0219	3.0	16.0	42	36	-60	+13	+16	1200
220	T2	10	0044	0132	0220	3.0	16.0	42	36	-60	+13	+16	1200
470	T3	20	0045	0133	0221	8.0	32.0	64	25	-65	+20	+25	1500
470	T3	10	0046	0134	0222	8.0	32.0	64	25	-65	+20	+25	1500
560	T4	20	0047	0135	0223	9.0	36.0	55	20	-65	+25	+30	2000
560	T4	10	0048	0136	0224	9.0	36.0	55	20	-65	+25	+30	2000
50 V_{DC} AT +85 °C; 30 V_{DC} AT +125 °C													
33	T1	20	0049	0137	0225	2.0	9.0	12.3	135	-29	+10	+12	700
33	T1	10	0050	0138	0226	2.0	9.0	12.3	135	-29	+10	+12	700
120	T2	20	0051	0139	0227	4.0	24.0	22.5	49	-42	+12	+15	1200
120	T2	10	0052	0140	0228	4.0	24.0	22.5	49	-42	+12	+15	1200
270	T3	20	0053	0141	0229	8.0	32.0	37	29	-46	+20	+25	1450
270	T3	10	0054	0142	0230	8.0	32.0	37	29	-46	+20	+25	1450
330	T4	20	0055	0143	0231	9.0	36.0	38	22	-46	+25	+30	1900
330	T4	10	0056	0144	0232	9.0	36.0	38	22	-46	+25	+30	1900
60 V_{DC} AT +85 °C;. 40 V_{DC} AT +125 °C													
27	T1	20	0057	0145	0233	3.0	12.0	10.2	144	-24	+10	+12	700
27	T1	10	0058	0146	0234	3.0	12.0	10.2	144	-24	+10	+12	700
100	T2	20	0059	0147	0235	4.0	20.0	19	54	-36	+12	+15	1100
100	T2	10	0060	0148	0236	4.0	20.0	19	54	-36	+12	+15	1100
220	T3	20	0061	0149	0237	8.0	32.0	30	29	-40	+16	+20	1400
220	T3	10	0062	0150	0238	8.0	32.0	30	29	-40	+16	+20	1400
270	T4	20	0063	0151	0239	9.0	36.0	27	23	-45	+20	+25	1850
270	T4	10	0064	0152	0240	9.0	36.0	27	23	-45	+20	+25	1850

Notes

(1) Dash number will include the letter "H" to indicate the optional vibration and shock requirements (i.e., 51 *g* random vibration, 80 *g* sinusoidal vibration and 500 *g* shock).

(2) For ripple current limits at various temperatures, voltages and frequencies, see Ripple Current table.

STANDARD RATINGS / EXTENDED RATINGS: CLR81, M39006/25-XXXX

CAPACITANCE (µF)	CASE CODE	CAP. TOL. (± %)	PART NO. M39006/25- (1) FAILURE RATE LEVEL (%/1000 h)			MAX. DCL (µA) AT		MAX. DF AT +25 °C (%)	MAX. IMP. AT -55 °C (Ω)	MAX. CAPACITANCE CHANGE (%) AT			MAX. (1) RIPPLE CURRENT AT +85 °C 40 kHz (mA)
			M 1.0	P 0.1	R 0.01	+25 °C	+85 °C +125 °C			-55 °C	+85 °C	+125 °C	
75 V_{DC} AT +85 °C; 50 V_{DC} AT +125 °C													
22	T1	20	0065	0153	0241	3.0	12.0	8.5	157	-19	+10	+12	600
22	T1	10	0066	0154	0242	3.0	12.0	8.5	157	-19	+10	+12	600
82	T2	20	0067	0155	0243	4.0	24.0	15.2	63	-30	+12	+15	1000
82	T2	10	0068	0156	0244	4.0	24.0	15.2	63	-30	+12	+15	1000
180	T3	20	0069	0157	0245	9.0	36.0	24.4	30	-35	+16	+20	1300
180	T3	10	0070	0158	0246	9.0	36.0	24.4	30	-35	+16	+20	1300
220	T4	20	0071	0159	0247	10.0	40.0	37.0	24	-40	+20	+25	1800
220	T4	10	0072	0160	0248	10.0	40.0	37.0	24	-40	+20	+25	1800
100 V_{DC} AT +85 °C; 65 V_{DC} AT +125 °C													
10	T1	20	0073	0161	0249	3.0	12.0	4.5	200	-17	+10	+12	800
10	T1	10	0074	0162	0250	3.0	12.0	4.5	200	-17	+10	+12	800
39	T2	20	0075	0163	0251	5.0	24.0	10.4	80	-20	+12	+15	1300
39	T2	10	0076	0164	0252	5.0	24.0	10.4	80	-20	+12	+15	1300
68	T3	20	0077	0165	0253	10.0	40.0	11.3	40	-30	+14	+16	1600
68	T3	10	0078	0166	0254	10.0	40.0	11.3	40	-30	+14	+16	1600
120	T4	20	0079	0167	0255	12.0	48.0	25	30	-35	+15	+17	2000
120	T4	10	0080	0168	0256	12.0	48.0	25	30	-35	+15	+17	2000
125 V_{DC} AT +85 °C; 85 V_{DC} AT +125 °C													
6.8	T1	20	0081	0169	0257	3.0	12.0	6.0	300	-14	+10	+12	700
6.8	T1	10	0082	0170	0258	3.0	12.0	6.0	300	-14	+10	+12	700
27	T2	20	0083	0171	0259	5.0	24.0	7.2	90	-18	+12	+15	1200
27	T2	10	0084	0172	0260	5.0	24.0	7.2	90	-18	+12	+15	1200
47	T3	20	0085	0173	0261	10.0	40.0	7.9	50	-26	+14	+16	1500
47	T3	10	0086	0174	0262	10.0	40.0	7.9	50	-26	+14	+16	1500
82	T4	20	0087	0175	0263	12.0	48.0	17.4	32	-30	+15	+17	1900
82	T4	10	0088	0176	0264	12.0	48.0	17.4	32	-30	+15	+17	1900

Notes

(1) Dash number will include the letter "H" to indicate the optional vibration and shock requirements (i.e., 51 *g* random vibration, 80 *g* sinusoidal vibration and 500 *g* shock).

(2) For ripple current limits at various temperatures, voltages and frequencies, see Ripple Current table.

CLR79, CLR81 RIPPLE CURRENT MULTIPLIERS VS. FREQUENCY, TEMPERATURE AND APPLIED PEAK VOLTAGE

FREQUENCY OF APPLIED RIPPLE CURRENT		120 Hz				800 Hz				1 kHz				10 kHz				40 kHz				100 kHz			
AMBIENT STILL AIR		TEMP °C				TEMP °C				TEMP °C				TEMP °C				TEMP °C				TEMP °C			
		≤ 55	85	105	125	≤ 55	85	105	125	≤ 55	85	105	125	≤ 55	85	105	125	≤ 55	85	105	125	≤ 55	85	105	125
% OF APPLIED VOLTAGE	100 %	0.60	0.39	-	-	0.71	0.43	-	-	0.72	0.46	-	-	0.88	0.55	-	-	1.0	0.63	-	-	1.1	0.69	-	-
	90 %	0.60	0.46	-	-	0.71	0.55	-	-	0.72	0.55	-	-	0.88	0.67	-	-	1.0	0.77	-	-	1.1	0.85	-	-
	80 %	0.60	0.52	0.35	-	0.71	0.62	0.42	-	0.72	0.62	0.42	-	0.88	0.76	0.52	-	1.0	0.87	0.59	-	1.1	0.96	0.65	-
	70 %	0.60	0.58	0.44	-	0.71	0.69	0.52	-	0.72	0.70	0.52	-	0.88	0.85	0.64	-	1.0	0.97	0.73	-	1.1	1.07	0.80	-
	66 2/3 %	0.60	0.60	0.46	0.27	0.71	0.71	0.55	0.32	0.72	0.72	0.55	0.32	0.88	0.88	0.68	0.40	1.0	1.0	0.77	0.45	1.1	1.1	0.85	0.50

Notes

1. At +125 °C the rated voltage of the capacitors decreases to 66 2/3 % of the +85 °C rated voltage.
2. The peak of the applied AC ripple voltage plus the applied DC voltage must not exceed the DC voltage rating of the capacitor either forward or reverse.
3. The ripple current listed represents a rating calculated using a maximum internal temperature rise (ΔT) of +50 °C at 40 kHz at +85 °C ambient with a maximum peak rated voltage of 66 2/3 % of the +85 °C peak voltage rating.
4. The maximum allowable internal temperature rise (ΔT) decreases linearly to a calculated +10 °C rise at +125 °C ambient.
5. The internal temperature rise is directly proportional to the equivalent series resistance of the capacitor and equivalent series resistance increases with decreasing frequency.

Wet Tantalum Capacitors
Military Styles CLR79, CLR81, CLR90, and CLR91

ELECTRICAL PERFORMANCE CHARACTERISTICS			
ITEM	**PERFORMANCE CHARACTERISTICS**		
Operating temperature range	-55 °C to +85 °C (to +125 °C with voltage derating)		
Capacitance tolerance	± 20 %, ± 10 %, at 120 Hz, at +25 °C		
Capacitance change by temperature	Limit per Standard Ratings table		
ESR	Limit per Standard Ratings table, at +25 °C, 120 Hz		
Impedance	Limit per Standard Ratings table, at -55 °C, 120 Hz		
DCL (Leakage current)	Limit per Standard Ratings table		
AC ripple current	Limit per Standard Ratings table, at +85 °C and 40 kHz		
Reverse voltage	Reverse voltage rating at +85 °C is 3 V_{DC} and at +125 °C is 2 V_{DC}		
Maximum operating voltage	Rated (+85 °C) V_{DC}	Derated (+125 °C) V_{DC}	Surge (+85 °C) V_{DC}
	6	4	6.9
	8	5	9.2
	10	7	11.5
	15	10	17.2
	25	15	28.8
	30	20	34.5
	50	30	57.5
	60	40	69.0
	75	50	86.2
	100	65	115.0
	125	85	144.0
Surge voltage	The DC surge voltage is the maximum voltage to which the capacitor can be subjected under any conditions including transients and peak ripple at the highest line voltage. The DC surge voltage is 115 % of rated DC voltage		

PERFORMANCE CHARACTERISTICS		
ITEM	**CONDITION**	**POST TEST PERFORMANCE**
Surge voltage	85 °C 1000 successive test cycles at the applicable DC surge voltage specified in series with a 1 kΩ resistor at the rate of 30 s ON, 5.5 min OFF	The capacitors shall meet the requirements of MIL-PRF-39006: DC leakage: not to exceed the specified value Capacitance change: within ± 5 % of initial measurement Dissipation factor: not to exceed the specified value There shall be no evidence of mechanical damage or leakage of electrolyte
Life testing	Method 108 of MIL-STD-202. Capacitors shall be capable of withstanding a 10 000 h life test at a temperature +85 °C at rated voltage	The capacitors shall meet the requirements of MIL-PRF-39006: DC leakage at 85 °C and 125 °C: not to exceed 125 % of the specified value DC leakage at 25 °C: not to exceed the specified value Capacitance change: within +10 %, -20 % of initial measurement Dissipation factor: not to exceed 200 % of the specified value Dielectric withstanding voltage: 2000 V_{DC}, min. Insulation resistance: 100 MΩ, min.
AC ripple life	As specified in MIL-PRF-39006: 2000 h, +85 °C	The capacitors shall meet the requirements of MIL-PRF-39006: DC Leakage: not to exceed the specified value Capacitance change: within ± 10 % of initial measurement Dissipation factor: not to exceed the specified value There shall be no damage, obliteration of marking, or leakage of electrolyte

Typical Performance Characteristics

ENVIRONMENTAL CHARACTERISTICS		
ITEM	**CONDITION**	**POST TEST PERFORMANCE**
Stability at low and high temperatures	As specified in MIL-PRF-39006	The capacitors shall meet the requirements of MIL-PRF-39006
Moisture resistance	Method 106 of MIL-STD-202	The capacitors shall meet the requirements of MIL-PRF-39006: DC leakage: not to exceed 125 % of +25 °C specified value Capacitance change: within ± 8 % of initial measurement Dissipation factor: not to exceed 115 % of the specified value
Thermal shock	Method 107 of MIL-STD-202, condition A (with step 3 at +125 °C) Number of cycles: 300 cycles for qualification and group C, subgroup 7; 30 cycles for group B and group C, subgroup 8	The capacitors shall meet the requirements of MIL-PRF-39006: DC leakage: not to exceed 200 % of +25 °C specified value for qualification and group C DC leakage: not to exceed 125 % of +25 °C specified value for group B Capacitance change: within ± 5 % of initial measurement Dissipation factor: not to exceed 115 % of the specified value
Salt atmosphere (corrosion)	Method 101 of MIL-STD-202, condition B (48 h)	There shall be no harmful corrosion, and the finish shall protect at least 90 % of any exposed metal surface of the capacitor. There shall be no unwrapping of, or mechanical damage to, the insulating sleeving, when applicable. Marking shall remain legible
Low temperature storage	Method 502 of MIL-STD-810, Storage temperature: -62 °C +0 °C, -3 °C. Exposure time: 72 h followed by a 1 h exposure at +125 °C, +7 °C, -0 °C within 24 h after low temperature storage	The capacitors shall meet the requirements of MIL-PRF-39006: DC leakage: not to exceed the specified value Capacitance change: within ± 5 % of initial measurement Dissipation factor: not to exceed the specified value There shall be no evidence of leakage of electrolyte
Seal	Method 112 of MIL-STD-202, conditions A or D, and C	When the capacitors are tested as specified in MIL-PRF-39006, there shall be no evidence of leakage.
Barometric pressure (reduced)	Method 105 of MIL-STD-202, condition E (150 000 ft) (45 720.1 m)	There shall be no flashover, breakdown, or harmful deformation of the case, and mechanical damage, obliteration of marking, or leakage of electrolyte.

MECHANICAL PERFORMANCE CHARACTERISTICS		
ITEM	**CONDITION**	**POST TEST PERFORMANCE**
Shock (specified pulse)	Method 213 of MIL-STD-202, condition I (100 *g*) or condition D (500 *g*) for "H" designated units	The capacitors shall meet the requirements of MIL-PRF-39006
Vibration, high frequency	Method 204 of MIL-STD-202, condition D (20 *g*) or condition H (80 *g*) for "H" designated units	The capacitors shall meet the requirements of MIL-PRF-39006
Random vibration ("H" designated units only)	Method 214 of MIL-STD-202, condition II-K (51 *g*).	The capacitors shall meet the requirements of MIL-PRF-39006: DC leakage: not to exceed 125 % of the specified value Capacitance change: within ± 5 % of initial measurement Dissipation factor: not to exceed 115 % of the specified value There shall be no evidence of harmful corrosion, mechanical damage, obliteration of marking, or leakage of electrolyte.
Solderability	Method 208 of MIL-STD-202	The capacitors shall meet the requirements of MIL-PRF-39006
Terminal strength	Pull test: method 211 of MIL-STD-202, condition A. Wire-lead bend: in accordance with MIL-PRF-39006	There shall be no loosening of or permanent damage to the terminals, terminal weld or solder, or seal.
Dielectric withstanding voltage	Method 301 of MIL-STD-202, 2000 V_{DC} min.	The capacitors shall meet the requirements of MIL-PRF-39006
Insulation resistance	Method 302 of MIL-STD-202, condition B (500 V_{DC} ± 10 %)	The insulation resistance shall be not less than 100 MΩ
Resistance to solvent	Method 215 of MIL-STD-202	There shall be no mechanical or visual damage to capacitors post-conditioning. Marking shall remain legible, no degradation of the can material.
Resistance to soldering heat	Method 210 of MIL-STD-202, condition C	The capacitors shall meet the requirements of MIL-PRF-39006: DC Leakage: not to exceed the specified value Capacitance change: within ± 5 % of initial measurement Dissipation factor: not to exceed the specified value There shall be no evidence of mechanical damage

Disclaimer

ALL PRODUCT, PRODUCT SPECIFICATIONS AND DATA ARE SUBJECT TO CHANGE WITHOUT NOTICE TO IMPROVE RELIABILITY, FUNCTION OR DESIGN OR OTHERWISE.

Vishay Intertechnology, Inc., its affiliates, agents, and employees, and all persons acting on its or their behalf (collectively, “Vishay”), disclaim any and all liability for any errors, inaccuracies or incompleteness contained in any datasheet or in any other disclosure relating to any product.

Vishay makes no warranty, representation or guarantee regarding the suitability of the products for any particular purpose or the continuing production of any product. To the maximum extent permitted by applicable law, Vishay disclaims (i) any and all liability arising out of the application or use of any product, (ii) any and all liability, including without limitation special, consequential or incidental damages, and (iii) any and all implied warranties, including warranties of fitness for particular purpose, non-infringement and merchantability.

Statements regarding the suitability of products for certain types of applications are based on Vishay’s knowledge of typical requirements that are often placed on Vishay products in generic applications. Such statements are not binding statements about the suitability of products for a particular application. It is the customer’s responsibility to validate that a particular product with the properties described in the product specification is suitable for use in a particular application. Parameters provided in datasheets and / or specifications may vary in different applications and performance may vary over time. All operating parameters, including typical parameters, must be validated for each customer application by the customer’s technical experts. Product specifications do not expand or otherwise modify Vishay’s terms and conditions of purchase, including but not limited to the warranty expressed therein.

Except as expressly indicated in writing, Vishay products are not designed for use in medical, life-saving, or life-sustaining applications or for any other application in which the failure of the Vishay product could result in personal injury or death. Customers using or selling Vishay products not expressly indicated for use in such applications do so at their own risk. Please contact authorized Vishay personnel to obtain written terms and conditions regarding products designed for such applications.

No license, express or implied, by estoppel or otherwise, to any intellectual property rights is granted by this document or by any conduct of Vishay. Product names and markings noted herein may be trademarks of their respective owners.