Excellent Integrated System Limited

Stocking Distributor

Click to view price, real time Inventory, Delivery & Lifecycle Information:

Molex Connector Corporation
0755860003

For any questions, you can email us directly:
sales@integrated-circuit.com

Distributor of Molex Connector Corporation: Excellent Integrated System Limited
Datasheet of 0755860003 - CONN RCPT 36POS IPASSTM R/A SMD
Contact us: sales@integrated-circuit.com Website: www.integrated-circuit.com

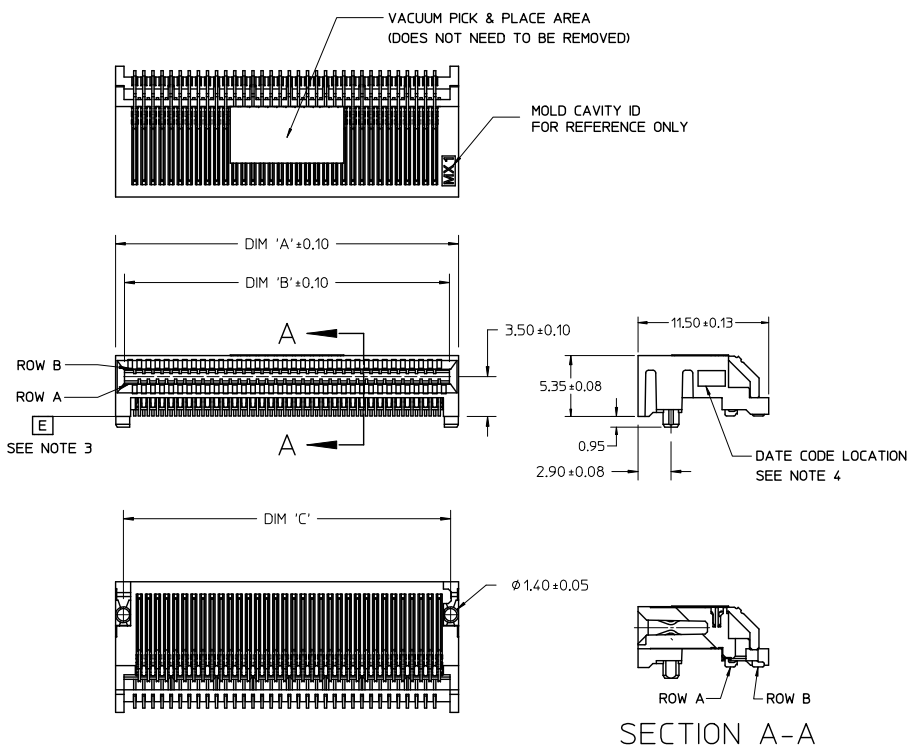

68 CIRCUIT ASSEMBLY SHOWN

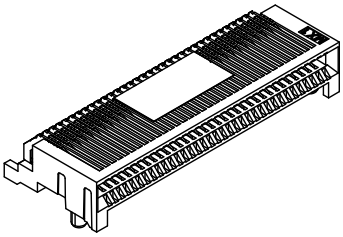

CIRCUIT SIZE	ITEM NUMBER	PLATING OPTION	DIM 'A'	DIM 'B'	DIM 'C'
26	75586-0004	OPTION 1	13.40	11.80	12.00
26	75586-0009	OPTION 2	13.40	11.80	12.00
36	75586-0003	OPTION 1	17.40	15.80	16.00
36	75586-0008	OPTION 2	17.40	15.80	16.00
38	75586-0010	OPTION 1	18.20	16.60	16.80
38	75586-0011	OPTION 2	18.20	16.60	16.80
50	75586-0001	OPTION 1	23.00	21.40	21.60
50	75586-0006	OPTION 2	23.00	21.40	21.60
68	75586-0002	OPTION 1	30.20	28.60	28.80
68	75586-0007	OPTION 2	30.20	28.60	28.80

NOTES
1. MATERIAL:
   HOUSING - HIGH TEMPERATURE THERMOPLASTIC GLASS FILLED.
   UL 94V-0, BLACK
   TERMINALS - COPPER ALLOY
2. PLATING:
   OPTION 1
   CONTACT AREA - 0.38 µm MIN GOLD OVER 2.54 µm MIN NICKEL
   SOLDER FOOT AREA - 2.54 - 5.09 µm TIN OVER 1.27 µm MIN NICKEL.
   OPTION 2
   CONTACT AREA - 0.76 µm MIN GOLD OVER 2.54 µm NICKEL
   SOLDER AREA - 2.54 -5.09 µm TIN OVER 1.27 µm MIN NICKEL
3. TERMINAL SOLDER FEET TO BE COPLANAR WITHIN 0.10/.004 MEASURED FROM FRONT HOUSING STAND OFF (DATUM E)
4. DATE CODE: 4 DIGIT (3 DIGIT DATE, 1 DIGIT YEAR)
5. CIRCUIT IDENTIFIER: SEE APPROPRIATE INDUSTRY SPECIFICATION FOR LOCATION OF PIN 1
6. TO BE USED WITH EXTERNAL CABLES (74546 & 74547 SERIES) AND GUIDE FRAMES (74540 & 74548 SERIES)
7. TESTER/ANALYZER CABLES AVAILABLE (74557 & 74558 SERIES)
8. PACKAGED PER PACKAGING SPECIFICATION: PK-75586-002
9. CONFORMS TO PRODUCT SPECIFICATION: PS-75586-001
10. THIS PART CONFORMS TO CLASS C REQUIREMENTS OF COSMETIC SPECIFICATION PS-45499-002.

iPass™ IS A TRADEMARK OF MOLEX

REVISED NOTE 2
EC NO: UCP2012-4064 2012/06/26
DRWN:TMCCLELL 2012/06/28
CH'KD:
APPR:MBANAKIS
DESCRIPTION
REV G2

QUALITY SYMBOLS

GENERAL TOLERANCES (UNLESS SPECIFIED)

	mm	INCH
4 PLACES	± ---	± ---
3 PLACES	± ---	± ---
2 PLACES	± 0.13	± ---
1 PLACE	± 0.25	± ---
0 PLACE	±	±
ANGULAR ±1/2°		

DRAFT WHERE APPLICABLE MUST REMAIN WITHIN DIMENSIONS

DIMENSION STYLE: MM ONLY
SCALE: 4:1
DESIGN UNITS: METRIC
THIRD ANGLE PROJECTION

		DATE
DRAWN BY	KREGNIER	07/28/04
CHECKED BY	JLONG	07/29/04
APPROVED BY	RNELSON	07/30/04

TITLE: I-PASS R/A CONNECTOR EXTERNAL ASSEMBLY .8 MM PITCH I/O

molex

MATERIAL NO.: SEE CHART
DOCUMENT NO.: SD-75586-001
SHEET NO.: 1 OF 3
SIZE: C

THIS DRAWING CONTAINS INFORMATION THAT IS PROPRIETARY TO MOLEX INCORPORATED AND SHOULD NOT BE USED WITHOUT WRITTEN PERMISSION

tb_frame_C_P_AM_T
Rev. G 2012/01/11

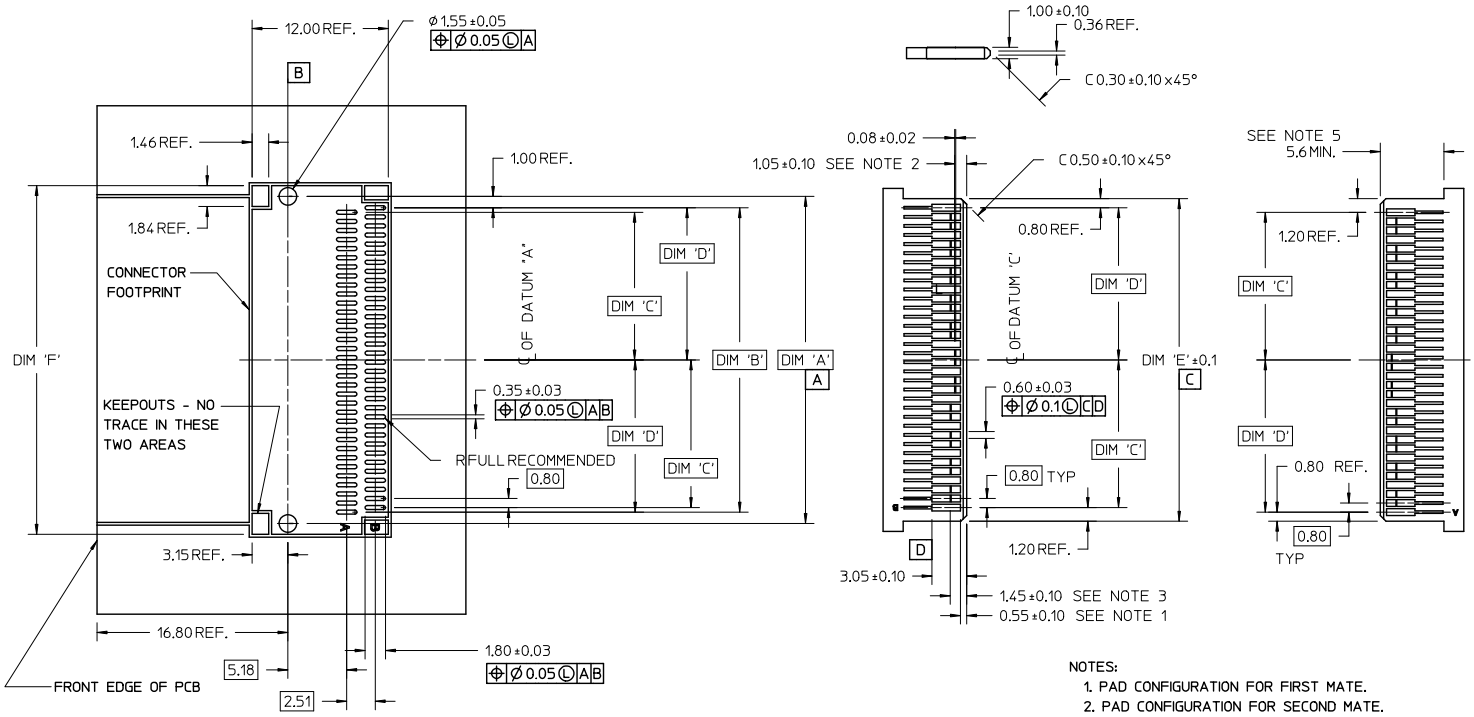

NOTES:

1. PAD CONFIGURATION FOR FIRST MATE.
2. PAD CONFIGURATION FOR SECOND MATE.
3. PAD CONFIGURATION FOR THIRD MATE (HIGH SPEED SIGNALS).
4. FOR PIN ASSIGNMENTS AND MATING SEQUENCE (1ST, 2ND, 3RD), SEE APPLICABLE SPECIFICATION.
5. MINIMUM STEP REQUIRED IF PCB MADE WIDER THAN CARD TOUNGE.
6. SEE 74540 OR 74548 SERIES FOR GUIDE FRAME FOOT PRINT AND KEEP OUT AREA.

iPass™ IS A TRADEMARK OF MOLEX

CIRCUIT SIZE	TERM/SIDE 'N'	DIM 'A' (PEG TO PEG)	DIM 'B' (FIRST PAD TO LAST PAD)	DIM 'C' (CENTERLINE TO PAD)	DIM 'D' (CENTERLINE TO PAD)	DIM 'E' (MODULE BOARD WIDTH)	DIM 'F' (CONNECTOR WIDTH)
26	13	12.00	10.00	4.60	5.00	11.60	13.90
36	18	16.00	14.00	6.60	7.00	15.60	17.90
38	19	16.80	14.80	7.00	7.40	16.40	18.70
50	25	21.60	19.60	9.40	9.80	21.20	23.50
68	34	28.80	26.80	13.00	13.40	28.40	30.70

SEE SHEET 1
EC NO: UCP2012-4064 2012/06/26
DRWN: MCLELL 2012/06/28
CHKD:
APPR: MBANAKIS
DESCRIPTION
REV G2

QUALITY SYMBOLS

GENERAL TOLERANCES (UNLESS SPECIFIED)

	mm	INCH
4 PLACES	± ---	± ---
3 PLACES	± ---	± ---
2 PLACES	± 0.13	± ---
1 PLACE	± 0.25	± ---
0 PLACE	±	±
ANGULAR ±1/2°		

DRAFT WHERE APPLICABLE MUST REMAIN WITHIN DIMENSIONS

DIMENSION STYLE: MM ONLY
SCALE: 4:1
DESIGN UNITS: METRIC
THIRD ANGLE PROJECTION

DRAWN BY: KREGNIER DATE: 07/28/04
CHECKED BY: JLONG DATE: 07/29/04
APPROVED BY: RNELSON DATE: 07/30/04

TITLE: I-PASS R/A CONNECTOR EXTERNAL ASSEMBLY .8 MM PITCH I/O

molex

MATERIAL NO.: SEE CHART
DOCUMENT NO.: SD-75586-001
SHEET NO.: 2 OF 3
SIZE: C

THIS DRAWING CONTAINS INFORMATION THAT IS PROPRIETARY TO MOLEX INCORPORATED AND SHOULD NOT BE USED WITHOUT WRITTEN PERMISSION

tb_frame_C_P_AM_T
Rev. G 2012/01/11

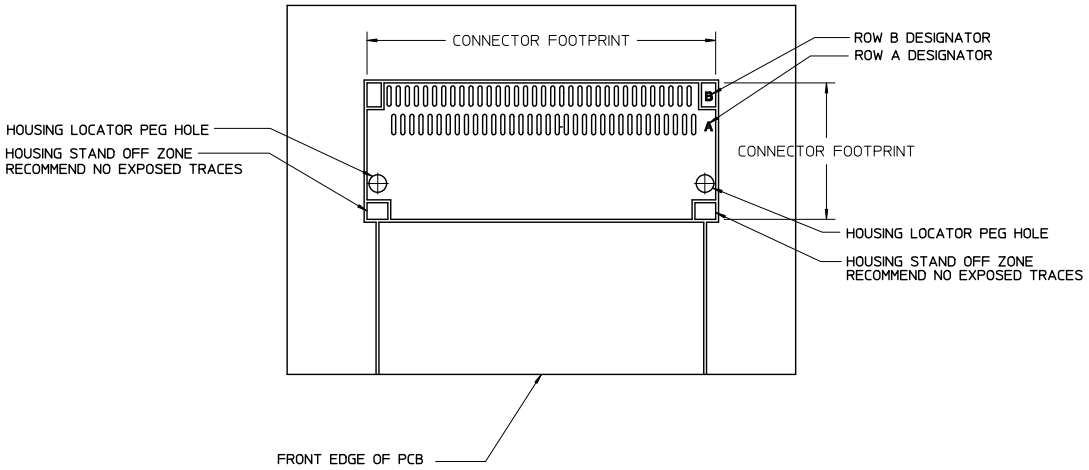

iPass™ IS A TRADEMARK OF MOLEX

SEE SHEET 1
EC NO: UCP2012-4064
DRWN: MCCLELL 2012/06/26
CH'KD: 2012/06/28
APPR: MBANAKIS
DESCRIPTION
REV
G2

QUALITY SYMBOLS

GENERAL TOLERANCES (UNLESS SPECIFIED)

	mm	INCH
4 PLACES	± ---	± ---
3 PLACES	± ---	± ---
2 PLACES	± 0.13	± ---
1 PLACE	± 0.25	± ---
0 PLACE	±	±
ANGULAR ±1/2°		

DRAFT WHERE APPLICABLE MUST REMAIN WITHIN DIMENSIONS

DIMENSION STYLE: MM ONLY
SCALE: 4:1
DESIGN UNITS: METRIC
THIRD ANGLE PROJECTION

DRAWN BY	KREGNIER	DATE 07/28/04
CHECKED BY	JLONG	DATE 07/29/04
APPROVED BY	RNELSON	DATE 07/30/04

TITLE: I-PASS R/A CONNECTOR EXTERNAL ASSEMBLY .8 MM PITCH I/O

molex

MATERIAL NO.: SEE CHART
DOCUMENT NO.: SD-75586-001
SHEET NO.: 3 OF 3
SIZE: C

THIS DRAWING CONTAINS INFORMATION THAT IS PROPRIETARY TO MOLEX INCORPORATED AND SHOULD NOT BE USED WITHOUT WRITTEN PERMISSION

tb_frame_C_P_AM_T
Rev. G 2012/01/11