Excellent Integrated System Limited

Stocking Distributor

Click to view price, real time Inventory, Delivery & Lifecycle Information:

TE Connectivity AMP Connectors
5-520459-1

For any questions, you can email us directly:
sales@integrated-circuit.com

THIS DRAWING IS UNPUBLISHED. RELEASED FOR PUBLICATION - - -
© COPYRIGHT BY TYCO ELECTRONICS CORPORATION. ALL RIGHTS RESERVED.

USE	PART	REVISIONS					
GP	00	P	LTR	DESCRIPTION	DATE	DWN	APVD
			AJ	REV PER EC 0513-0059-04	19MAR04	BM	JG

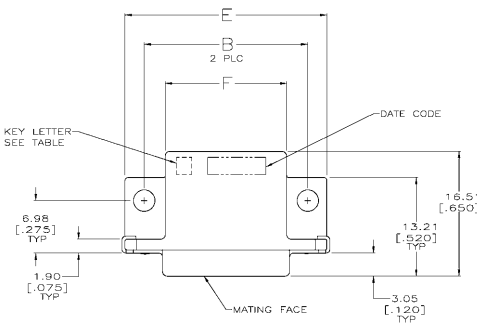

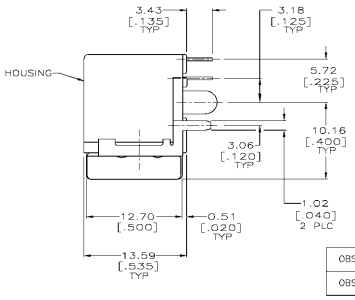

1. PREFIX AND SUFFIX NUMBERS MUST MATCH THOSE ON PLUG ASSEMBLY FOR PARTS TO MATE.
2. POLYESTER, FLAME RETARDANT, UL 94V-0 RATED, GLASS FILLED, BLACK.
3. 3.81µm [.000150] MIN TIN-LEAD OVER 2.54µm [.000100] MIN COPPER.
4. 1.27µm [.000050] MIN GOLD ON MATING SURFACE FOR A LENGTH OF 2.54 [.100] MIN, 3.81µm [.000150] MIN TIN-LEAD ON OPPOSITE END FOR A LENGTH OF 3.81 [.150] MIN, BOTH OVER 1.27µm [.000050] MIN NICKEL ON ENTIRE CONTACT.
5. 3.81µm [.000150] MIN TIN OVER 2.54µm [.000100] MIN COPPER.
6. 1.27µm [.000050] MIN GOLD ON MATING SURFACE FOR A LENGTH OF 2.54 [.100] MIN, 3.81µm [.000150] MIN TIN ON OPPOSITE END FOR A LENGTH OF 3.81 [.150] MIN, BOTH OVER 1.27µm [.000050] MIN NICKEL ON ENTIRE CONTACT.

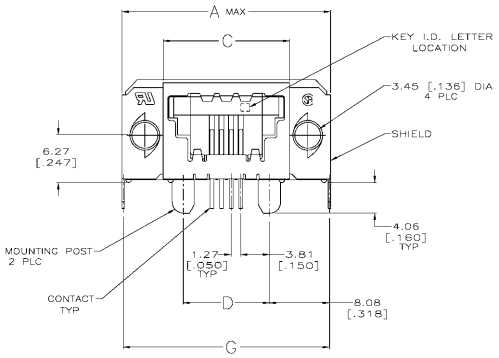

CONTACT FINISH	SHIELD FINISH	G	F	E	D	C	B	A	NO OF POSN	KEY I.D. LETTER	PART NO
OBSOLETE	6	5	32.41 [1.276]	21.08 [.830]	31.75 [1.250]	16.51 [.650]	21.82 [.859]	26.67 [1.050]	33.02 [1.300]	8	E	6-520459-2
OBSOLETE	4	3	27.33 [1.076]	16.00 [.630]	26.67 [1.050]	11.43 [.450]	16.74 [.659]	21.59 [.850]	27.94 [1.100]	4	F	6-520459-1
	4	3	42.57 [1.676]	31.24 [1.230]	41.91 [1.650]	26.67 [1.050]	31.98 [1.259]	36.83 [1.450]	43.18 [1.700]	16	E	5-520459-6
	4	3	32.41 [1.276]	21.08 [.830]	31.75 [1.250]	16.51 [.650]	21.82 [.859]	26.67 [1.050]	33.02 [1.300]	8	E	5-520459-3
	4	3	29.87 [1.176]	18.54 [.730]	29.21 [1.150]	13.97 [.550]	19.28 [.759]	24.13 [.950]	30.48 [1.200]	6	E	5-520459-2
	4	3	27.33 [1.076]	16.00 [.630]	26.67 [1.050]	11.43 [.450]	16.74 [.659]	21.59 [.850]	27.94 [1.100]	4	E	5-520459-1
OBSOLETE	4	3	42.57 [1.676]	31.24 [1.230]	41.91 [1.650]	26.67 [1.050]	31.98 [1.259]	36.83 [1.450]	43.18 [1.700]	16	D	4-520459-6
OBSOLETE	4	3	32.41 [1.276]	21.08 [.830]	31.75 [1.250]	16.51 [.650]	21.82 [.859]	26.67 [1.050]	33.02 [1.300]	8	D	4-520459-3
OBSOLETE	4	3	29.87 [1.176]	18.54 [.730]	29.21 [1.150]	13.97 [.550]	19.28 [.759]	24.13 [.950]	30.48 [1.200]	6	D	4-520459-2
	4	3	27.33 [1.076]	16.00 [.630]	26.67 [1.050]	11.43 [.450]	16.74 [.659]	21.59 [.850]	27.94 [1.100]	4	D	4-520459-1
OBSOLETE	4	3	42.57 [1.676]	31.24 [1.230]	41.91 [1.650]	26.67 [1.050]	31.98 [1.259]	36.83 [1.450]	43.18 [1.700]	16	C	3-520459-6
	4	3	32.41 [1.276]	21.08 [.830]	31.75 [1.250]	16.51 [.650]	21.82 [.859]	26.67 [1.050]	33.02 [1.300]	8	C	3-520459-3
OBSOLETE	4	3	29.87 [1.176]	18.54 [.730]	29.21 [1.150]	13.97 [.550]	19.28 [.759]	24.13 [.950]	30.48 [1.200]	6	C	3-520459-2
OBSOLETE	4	3	27.33 [1.076]	16.00 [.630]	26.67 [1.050]	11.43 [.450]	16.74 [.659]	21.59 [.850]	27.94 [1.100]	4	C	3-520459-1
OBSOLETE	4	3	42.57 [1.676]	31.24 [1.230]	41.91 [1.650]	26.67 [1.050]	31.98 [1.259]	36.83 [1.450]	43.18 [1.700]	16	B	2-520459-6
OBSOLETE	4	3	32.41 [1.276]	21.08 [.830]	31.75 [1.250]	16.51 [.650]	21.82 [.859]	26.67 [1.050]	33.02 [1.300]	8	B	2-520459-3
OBSOLETE	4	3	29.87 [1.176]	18.54 [.730]	29.21 [1.150]	13.97 [.550]	19.28 [.759]	24.13 [.950]	30.48 [1.200]	6	B	2-520459-2
OBSOLETE	4	3	27.33 [1.076]	16.00 [.630]	26.67 [1.050]	11.43 [.450]	16.74 [.659]	21.59 [.850]	27.94 [1.100]	4	B	2-520459-1
	4	3	42.57 [1.676]	31.24 [1.230]	41.91 [1.650]	26.67 [1.050]	31.98 [1.259]	36.83 [1.450]	43.18 [1.700]	16	A	1-520459-6
	4	3	32.41 [1.276]	21.08 [.830]	31.75 [1.250]	16.51 [.650]	21.82 [.859]	26.67 [1.050]	33.02 [1.300]	8	A	1-520459-3
	4	3	29.87 [1.176]	18.54 [.730]	29.21 [1.150]	13.97 [.550]	19.28 [.759]	24.13 [.950]	30.48 [1.200]	6	A	1-520459-2
	4	3	27.33 [1.076]	16.00 [.630]	26.67 [1.050]	11.43 [.450]	16.74 [.659]	21.59 [.850]	27.94 [1.100]	4	A	1-520459-1

THIS DRAWING IS A CONTROLLED DOCUMENT.
DIMENSIONS: mm[INCHES]
TOLERANCES UNLESS OTHERWISE SPECIFIED:
0 PLC ± -
1 PLC ± -
2 PLC ± -
3 PLC ± -
4 PLC ± 0.381 [.015]
ANGLES ± -
FINISH ± -
MATERIAL
HOUSING: 4
SHIELD: BRASS
CONTACT: PHOS BRONZE
SHIELD: SEE TABLE

DR: B. MCMASTER 19FEB04
CK: C. ROHDE 19FEB04
APVD: M. WALMSLEY 19FEB04
PRODUCT SPEC: 108-2047
APPLICATION SPEC: 114-2081
WEIGHT: -

Tyco Electronics Corporation
Harrisburg, Pa 17105-3608

PART: RECEPTACLE ASSEMBLY, SIDE ENTRY WITH GROUND, SOL

SIZE	CAGE CODE	DRAWING NO	RESTRICTED TO
A1	00779	C-520459	—

CUSTOMER DRAWING | SCALE 4:1 | SHEET 1 OF 1 | REV AJ

AMP 4825 REV 31MAR2000