Excellent Integrated System Limited

Stocking Distributor

Click to view price, real time Inventory, Delivery & Lifecycle Information:

TE Connectivity AMP Connectors
2-322128-2

For any questions, you can email us directly:
sales@integrated-circuit.com

DRAWING MADE IN AMERICAN PROJECTION

© 1963 BY AMP INCORPORATED. ALL RIGHTS RESERVED. AMP PRODUCTS COVERED BY PATENTS AND/OR PATENTS PENDING.

REVISIONS

ZONE	LTR	DESCRIPTION		DATE	APPROVED
	E	REDRAWN & REVISED PG-5563		1-6-70	
	F	INACTIVATED 2-322128-1 P-7034		6-7-73	
	G	ADDED 2-322128-2 P-7000		2-12-77	
	H	REV. PER P-8347	REB.	8/4/79	
	J	OBSOLETE 2-1 PER P-9222	DDT	3-1-82	
	K	REV G-4680	TMS	5-9-88	JT

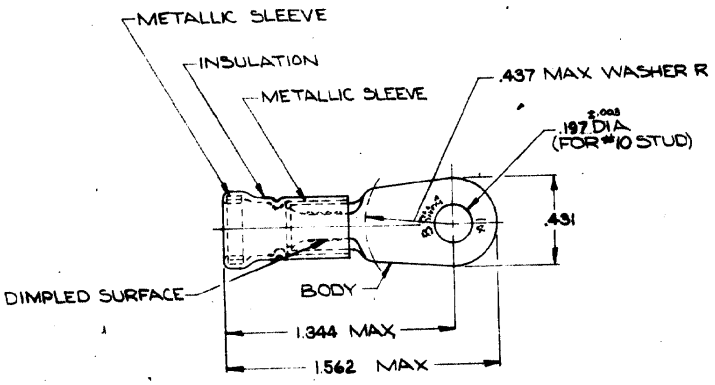

TONGUE MATERIAL THICKNESS = .040 ±.003
FOR .298 MAX WIRE INS DIA

TABLE I

QTY	DESCRIPTION	PART NO.	MATERIAL & FINISH
1	WIRE TERMINAL	SEE TABLE II	BODY: COPPER (QQ-C-576) FINISH: (SEE TABLE II) INSULATION: PVC COLOR: RED METALLIC SLEEVE: COPPER (QQ-C-576) METALLIC BAND: STEEL QQ-S-698 (ASTM A109)

TABLE II

PART NO	FINISH	PART NO ON TAPE
~~2-322128-1~~	~~GOLD PLATED (MIL-G-45204) TYPE II .00005 MIN. EXT. THK. OVER NICKEL PL. (QQ-N-290) .00003 MIN. EXT. THK.~~	OBSOLETE
322128	TIN PLATED (MIL-T-10727)	2-322128-2

UNLESS OTHERWISE SPECIFIED DIMENSIONS ARE IN INCHES
TOLERANCES ON: DECIMALS ±.005 ANGLES ±5°
MATERIAL: SEE TABLE I.

CONTRACT NO. —
DR. Wayne M. Mills 11-12-69
CHK. M. Eannuzzi 1-6-70
APPD. J. Wabel 1-7-70
M. Eannuzzi 1-7-70
DSGN APPD
OTHER APPD

AMP INCORPORATED HARRISBURG, PENNSYLVANIA

NAME: WIRE TERMINAL AMPLI-BOND - RING TONGUE WIRE SIZE: 8

SIZE	CODE IDENT NO.	NUMBER
B	00779	322128

SCALE NTS SHEET 1 OF 1

CUSTOMER DRAWING

AMP 1470-1 REV (7/68)